Soka

owner's manual (EN)

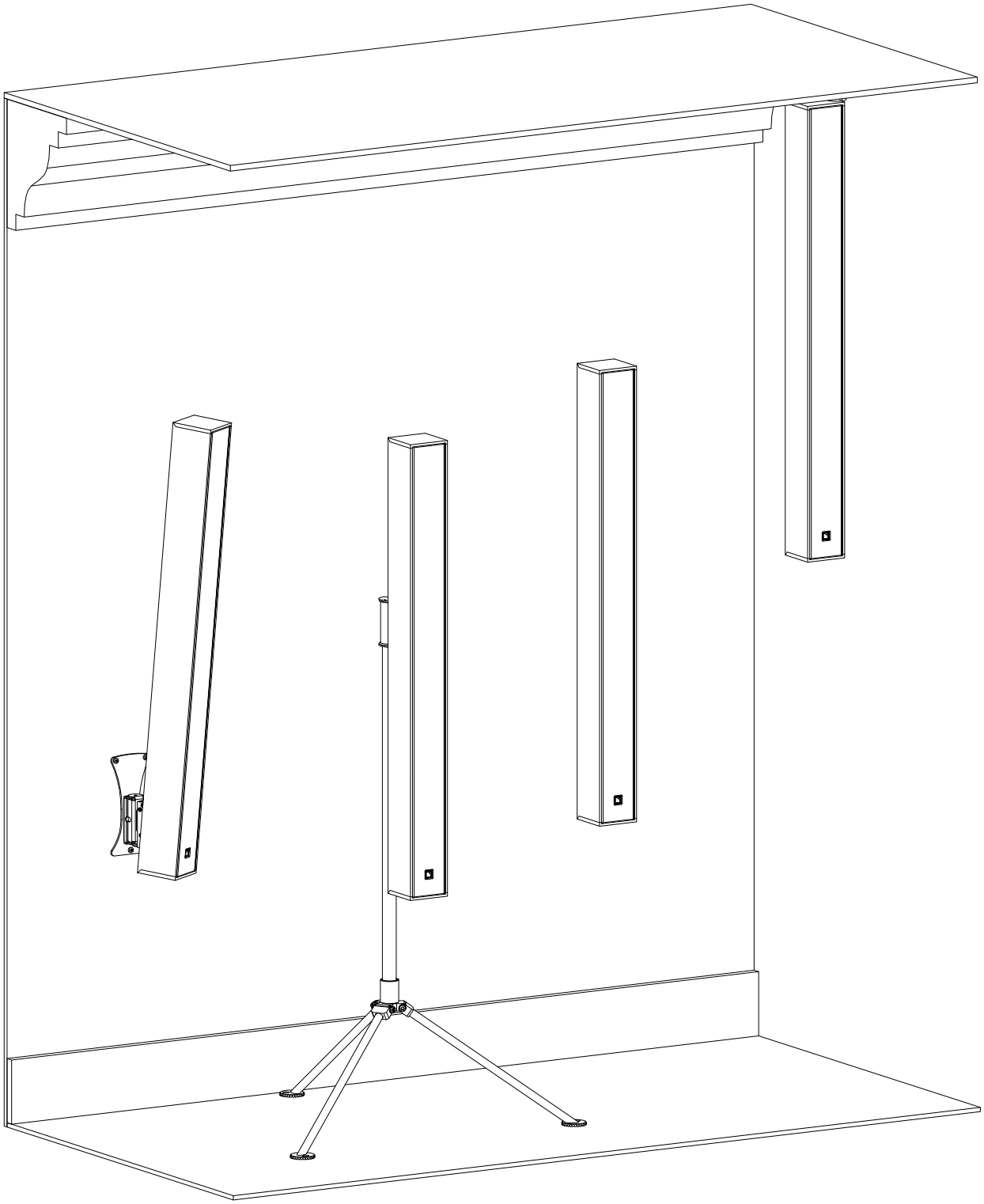

Document reference: Soka owner's manual (EN) version 3.0
Distribution date: April 8, 2024
© 2024 L-Acoustics. All rights reserved.
No part of this publication may be reproduced or transmitted in any form or by any means without the express written consent of the publisher.

Contents

Safety....6
Instructions....6
Introduction....8
Soka ultra-shallow colinear source....8
How to use this manual....8
Revision history....9
System components....10
Electro-acoustical description....12
Directivity....12
Preset description....13
Connectors....13
SPCON terminal block to speakON adapter....15
Rigging system description....16
Soka....16
Soka-onW....17
WALLx2....18
PANx2....19
TILT-SUPPORT....20
TILT5....21
PAN....22
VBAR....23
POLE....24
Mechanical safety....25
Loudspeaker configurations....27
Soka colinear source....27
Soka ultra-shallow colinear source with low-frequency element....28
Soka with SB6i....28
Soka with SB10i....31
Inspection and preventive maintenance....34
How to do preventive maintenance....34
Rigging part inspection....35
Mechanical system overview....35
Acoustical check....37

Rigging procedures....40
Tools....40
Wall-mounting with Soka-onW....40
Wall-mounting with WALLx2....45
Wall-mounting with PANx2....50
Wall-mounting Soka with TILT5....55
Wall-mounting Soka with PAN and TILT5....60
Ceiling-mounting or flying Soka with VBAR....68
Ceiling-mounting Soka with VBAR....69
Flying Soka with VBAR....72
Pole-mounting Soka with POLE....76

Connection to LA amplified controllers....78
Cabling schemes for Soka....79
Cabling Soka....80
Cabling....80
Cabling with SPCON....84

Corrective maintenance....86
Introduction....86
Exploded views....87
Disassembly and Reassembly procedures....88
D/R - Grill....88
D/R - LF speaker....89
D/R - Waveguide....91
D/R - HF driver....92

Specifications....94
Soka....94
SB6i....96
SB10i....97
Soka-onW....99
WALLx2....100
PANx2....101
TILT5....102
PAN....103
TILT-SUPPORT....104
VBAR....105
POLE....106
SPCON....107

APPENDIX A: Specifications for screws and anchors..... 108

APPENDIX B: Recommendation for speaker cables.....109

APPENDIX C: Specifications for custom rigging..... 110

Safety

Instructions

Inspect the system before any deployment.

Perform safety related checks and inspections before any deployment.

Perform preventive maintenance at least once a year.

Refer to the preventive maintenance section for a list of actions and their periodicity.

Insufficient upkeep of the product can void the warranty.

If any safety issue is detected during inspection, do not use the product before performing corrective maintenance.

Check for issues. A rigging system part or fastener is missing or loose. A rigging system part exhibits: bends, breaks, broken parts, corrosion, cracks, cracks in welded joints, deformation, denting, wear, holes. A safety cue or label is missing.

Never incorporate equipment or accessories not approved by L-Acoustics.

Read all the related PRODUCT INFORMATION documents shipped with the products before exploiting the system.

Do not store the product on an unstable cart, stand, tripod, bracket, or table.

Beware of sound levels.

Do not stay within close proximity of loudspeakers in operation.

Loudspeaker systems are capable of producing very high sound pressure levels (SPL) which can instantaneously lead to permanent hearing damage to performers, production crew and audience members. Hearing damage can also occur at moderate level with prolonged exposure to sound.

Check the applicable laws and regulations relating to maximum sound levels and exposure times.

Risk of crushing injury

Ensure that the wall or ceiling can support the load of the product.

It is recommended to mount only on solid structures. If mounting on a hollow structure (such as a wall cavity), place anchoring points on the framework (wall studs, ceiling joists), or reinforce the mounting area.

Select screws and anchors applicable to the wall or ceiling properties and to the load of the product. Prevent screws from loosening over time, using for example thread locker or lock washers.

Work with qualified personnel for rigging the system.

Installation should only be carried out by qualified personnel that are familiar with the rigging techniques and safety recommendations outlined in this manual.

Ensure personnel health and safety.

During installation and set-up personnel must wear protective headgear and footwear at all times. Under no circumstances is personnel allowed to climb on a loudspeaker assembly.

Respect the Working Load Limit (WLL) of third party equipment.

L-Acoustics is not responsible for any rigging equipment and accessories provided by third party manufacturers.

Verify that the Working Load Limit (WLL) of the suspension points, chain hoists and all additional hardware rigging accessories is respected.

Respect the maximum configurations and the recommended safety precautions.

For safety issue, respect the maximum configurations outlined in this manual. To check the conformity of any configuration in regards with the safety precautions recommended by L-Acoustics, model the system in Soundvision and refer to the warnings in Mechanical Data section.

Be cautious when flying a loudspeaker configuration.

Before installing/raising the product, check each individual element to make sure that it is securely fastened to the adjacent element. Always verify that no one is standing underneath the product when it is being installed/raised. Never leave the product unattended during the installation process.

As a general rule, L-Acoustics recommends the use of secondary safety at all times.

Be cautious when ground-stacking a loudspeaker array.

Do not stack the loudspeaker array on unstable ground or surface. If the array is stacked on a structure, platform, or stage, always check that the latter can support the total weight of the array.

As a general rule, L-Acoustics recommends the use of safety straps at all times.

Risk of falling objects

Verify that no unattached items remain on the product or assembly.

Risk of tipping

Remove all rigging accessories before transporting a product or an assembly.

Take into account the wind effects on dynamic load.

When a loudspeaker assembly is deployed in an open air environment, wind can produce dynamic stress to the rigging components and suspension points.

If the wind force exceeds 6 bft (Beaufort scale), lower down and/or secure the product or the assembly.

Intended use

This system is intended for use by trained personnel for professional applications.

As part of a continuous evolution of techniques and standards, L-Acoustics reserves the right to change the specifications of its products and the content of its documents without prior notice.

Check www.l-acoustics.com on a regular basis to download the latest document and software updates.

Long term exposure to extreme conditions may damage the product.

For more information, refer to the **Products weather protection** document, available on the website.

Read the maintenance section of this document before servicing the product.

Contact L-Acoustics for advanced maintenance.

Any unauthorized maintenance operation will void the product warranty.

This marking indicates that this product should not be disposed of with other household waste throughout the EU. To prevent possible harm to the environment or human health from uncontrolled waste disposal, recycle it responsibly to promote the sustainable reuse of material resources. To return your used device, please use the return and collection systems or contact the retailer where the product was purchased. They can take this product for environmentally safe recycling.

Introduction

Soka ultra-shallow colinear source

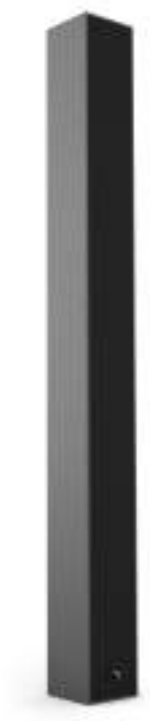

Soka is a colinear source system suited to medium throw applications that require discretion and elegance. Inheriting from our line source systems, Soka brings high fidelity and live concert power to high-end architectural and professional sound reinforcement settings, with minimal visual impact.

As a passive enclosure, Soka features nine 3.5" neodymium LF speakers and three 1" neodymium HF compression drivers, loaded by DOSC waveguides in a J-shaped progressive curvature. This transducer arrangement, called colinear source, produces a H/V directivity pattern of 140° x 26° (+5/-21°), optimized for ultra-wide horizontal coverage with extended throw capability and controlled vertical dispersion.

Soka can be driven using different presets to match specific acoustic needs or coupling configurations with subwoofers. A broadband preset provides extension down to 60 Hz and 124 dB of SPL. For vocal reinforcement, or when closely coupled with a subwoofer, such as SB6i or SB10i, Soka can be driven with the 100 or 200 Hz presets, offering very-high output of 130 dB or 133 dB respectively.

The unique combination of discrete form factor and performance makes Soka ideal for vocal reinforcement or surround systems when used on its own. Accompanied by a subwoofer, Soka is also an ideal main music system in museums, commercial, residential, luxury settings, hospitality spaces, and more.

This owner's manual is intended for on-wall configurations with the Soka enclosure only.
For in-wall configurations, refer to the **Sokar owner's manual**.

How to use this manual

The Soka owner's manual is intended for all actors involved in the system design, implementation, preventive and corrective maintenance of the Soka system. It must be used as follows:

1. Read the technical description for an overview of all system elements, their features, and their compatibilities.
   - Electro-acoustical description (p.12)
   - Rigging system description (p.16)
2. Prepare the system configuration. Consider the mechanical limits and the available acoustical configurations.
   - Mechanical safety (p.25)
   - Loudspeaker configurations (p.27)
3. Before rigging the system, perform mandatory inspections and functional checks.
4. To deploy the system, follow the step-by-step rigging instructions and refer to the cabling schemes.
   - Rigging procedures (p.40)
   - Connection to LA amplified controllers (p.78)

As part of a continuous evolution of techniques and standards, L-Acoustics reserves the right to change the specifications of its products and the content of its document without prior notice. Please check www.l-acoustics.com on a regular basis to download the latest document and software updates.

Contact information

For information on advanced corrective maintenance:
- contact your Certified Provider or your L-Acoustics representative

- for Certified Providers, contact the L-Acoustics customer service: customer.service@l-acoustics.com (EMEA/APAC), laus.service@l-acoustics.com (Americas).

Symbols

The following symbols are used in this document:

This symbol indicates a potential risk of harm to an individual or damage to the product.
It can also notify the user about instructions that must be strictly followed to ensure safe installation or operation of the product.

This symbol notifies the user about instructions that must be strictly followed to ensure proper installation or operation of the product.

This symbol notifies the user about complementary information or optional instructions.

Revision history

version number	publication date	modification
1.0	Jun. 2023	Initial version.
2.0	Sep. 2023	• Added Inspection and preventive maintenance (p.34) section. • Added Corrective maintenance (p.86) section.
3.0	Apr. 2024	• Added new WALLx2 (p.18), PANx2 (p.19), TILT-SUPPORT (p.20), TILT5 (p.21), PAN (p.22), VBAR (p.23), and POLE (p.24) rigging accessories. • Added new SPCON terminal block to speakON adapter (p.15).

System components

Loudspeaker enclosures

Soka	2-way passive colinear enclosure: 9 × 3.5" LF + 3 × 1" HF diaphragm
SB6i	Ultra-shallow subwoofer: 2 × 6.5"
SB10i	Ultra-compact subwoofer: 1 × 10" (installation version)

Powering and driving system

LA2Xi	Install-specific amplified controller 4 × 640 W / 4 ohms
LA4X	Amplified controller 4 × 1000 W / 8 ohms
LA7.16i	Install-specific amplified controller 16 × 1300 W / 8 ohms
LA12X	Amplified controller 4 × 2600 W / 4 ohms

Refer to the LA2Xi / LA4X / LA7.16i / LA12X owner's manual for operating instructions.

Cables

2 × 2.5 mm² cable	Speaker cable with bare wire endings Adapt the cable length to the installation.
custom 2-point speakON cable	2-point speakON cable (2.5 mm² gauge) to bare wire cable This cable needs to be custom made.
SPCON	2-point speakON adaptor (2.5 mm² gauge) for terminal blocks

Information about the connection of the enclosures to the LA amplified controllers is given in this document.

Refer to the LA2Xi / LA4X / LA7.16i / LA12X owner's manual for detailed instructions about the whole cabling scheme, including modulation cables and network.

Rigging elements

Soka-onW	On-wall mounting accessory for Soka
WALLx2	Wall-mounting kit
PANx2	Adjustable pan accessory kit +/-45°
TILT5	Fixed tilt accessory 5°
PAN	Adjustable pan accessory +/-45°
TILT-SUPPORT	Support plate for TILT/PAN/WALL accessories
VBAR	Rigging accessory for vertically-oriented loudspeaker
POLE	Pole-mount adapter

Software applications

Soundvision	3D acoustical and mechanical modeling software
LA Network Manager	Software for remote control and monitoring of amplified controllers

Refer to the Soundvision help.
Refer to the LA Network Manager help.

System component illustrations

Cables

2 × 2.5 mm² cable

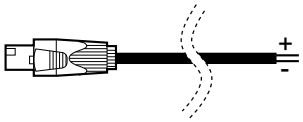

custom 2-point speakON cable

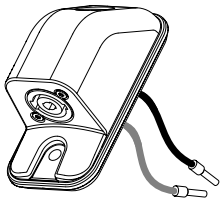

SPCON

Rigging accessories

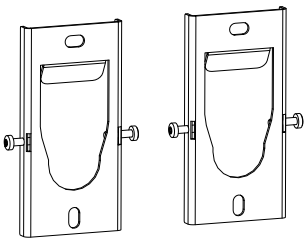

Soka-onW

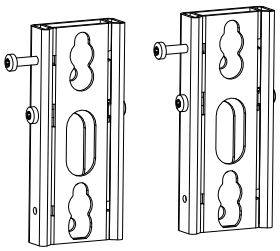

WALLx2

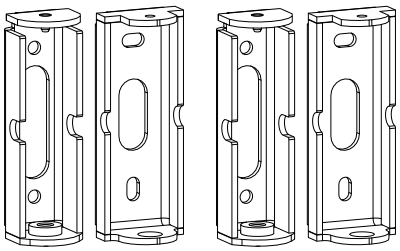

PANx2

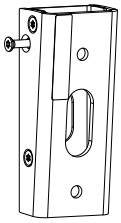

TILT5

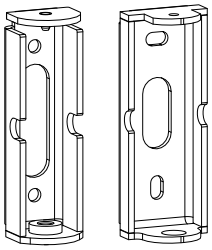

PAN

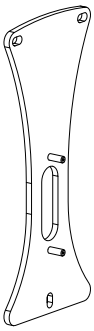

TILT-SUPPORT

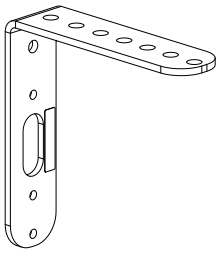

VBAR

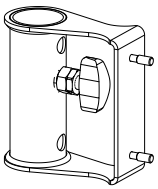

POLE

Software applications

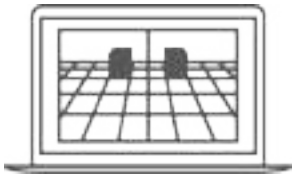

Soundvision

LA Network Manager

Electro-acoustical description

Directivity

Soka generates a horizontal directivity pattern of 140° and a vertical directivity pattern of +5°/-21° in J-shape (> 2 kHz).

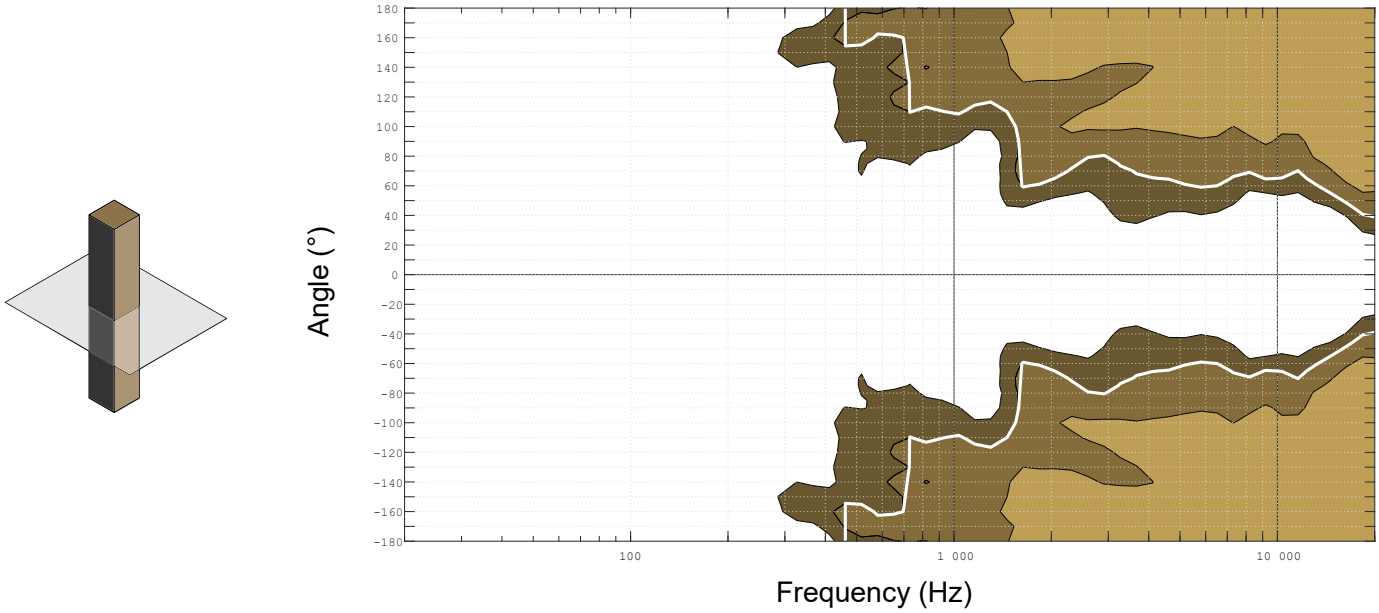

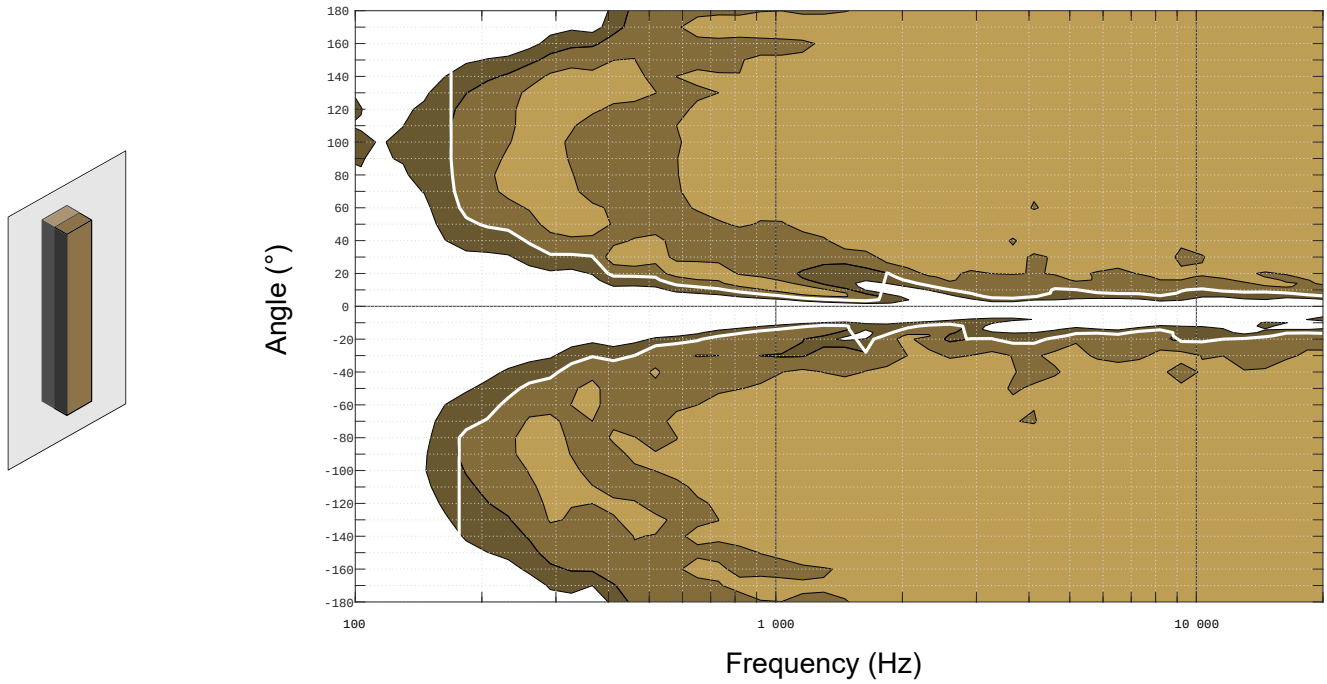

Dispersion angle diagram of a single enclosure, using lines of equal sound pressure at -3 dB, -6 dB, -12 dB.

Preset description

[SOKA] [SOKA_60] [SOKA_200]

outputs	channels	routing	gain	delay	polarity	mute
OUT 1	PA	IN A	0 dB	0 ms	+	ON
OUT 2	PA	IN A	0 dB	0 ms	+	ON
OUT 3	PA	IN A	0 dB	0 ms	+	ON
OUT 4	PA	IN A	0 dB	0 ms	+	ON

[SB10_60] [SB10_100] [SB10_200] [SB6_60] [SB6_100] [SB6_200]

outputs	channels	routing	gain	delay	polarity	mute
OUT 1	SB	IN A	0 dB	0 ms	+	ON
OUT 2	SB	IN A	0 dB	0 ms	+	ON
OUT 3	SB	IN A	0 dB	0 ms	+	ON
OUT 4	SB	IN A	0 dB	0 ms	+	ON

Connectors

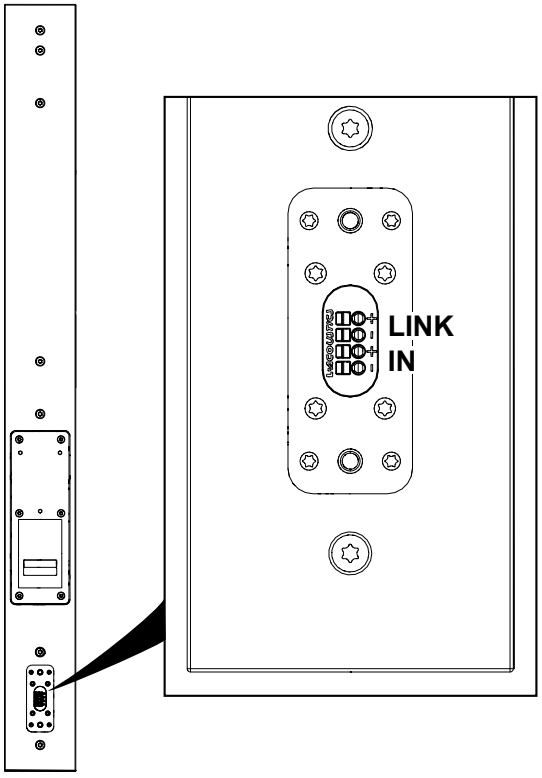

Soka is provided with a connector sealing plate with two cable glands for 2.5 mm^2 cables.

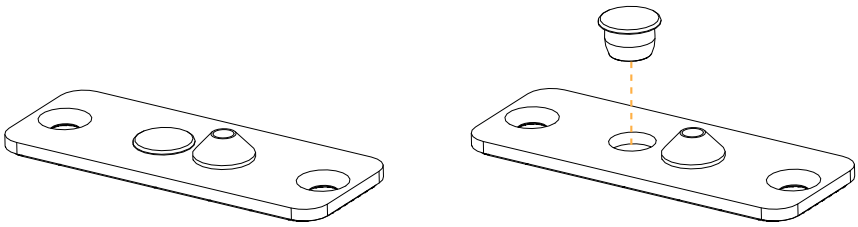

Pass the cables through the cable glands before connecting them to the screw terminals.

Secure the connector sealing plate to protect the connector.

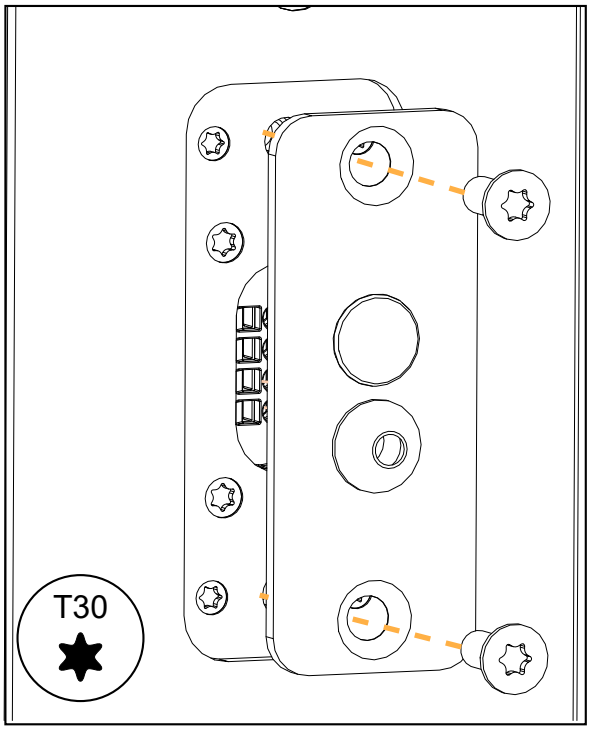

Internal pinout for L-Acoustics 2-way passive enclosures

Screw terminal points	IN +	IN -
Transducer connectors	+	-

SPCON terminal block to speakON adapter

SPCON is a 2-point speakON to bare wire adaptor for Soka. The cables have a gauge of 2.5 mm² and the ends are equipped with ferrules. SPCON replaces the connector sealing plate.

Risk of electric shock

When SPCON is connected to an amplified controller, the bare wires carry electrical voltage.

Always mount SPCON to the enclosure **before** connecting the speaker cable to SPCON.

Always disconnect the speaker cable from SPCON **before** removing SPCON from the enclosure.

If the speaker cable cannot be disconnected, unplug the amplified controller from the mains.

SPCON is only compatible with the following rigging accessories:

- VBAR
- POLE

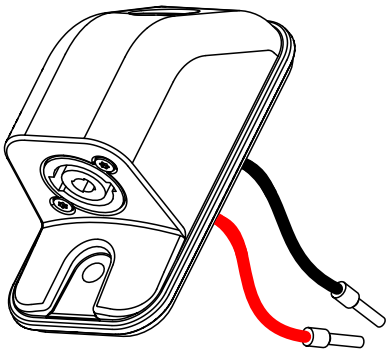

SPCON

2-point speakON

Rigging system description

Soka

Soka is a loudspeaker enclosure dedicated for installation projects.

Soka can be mounted on a wall, on a ceiling, or flown with compatible rigging accessories, using the inserts at the back.

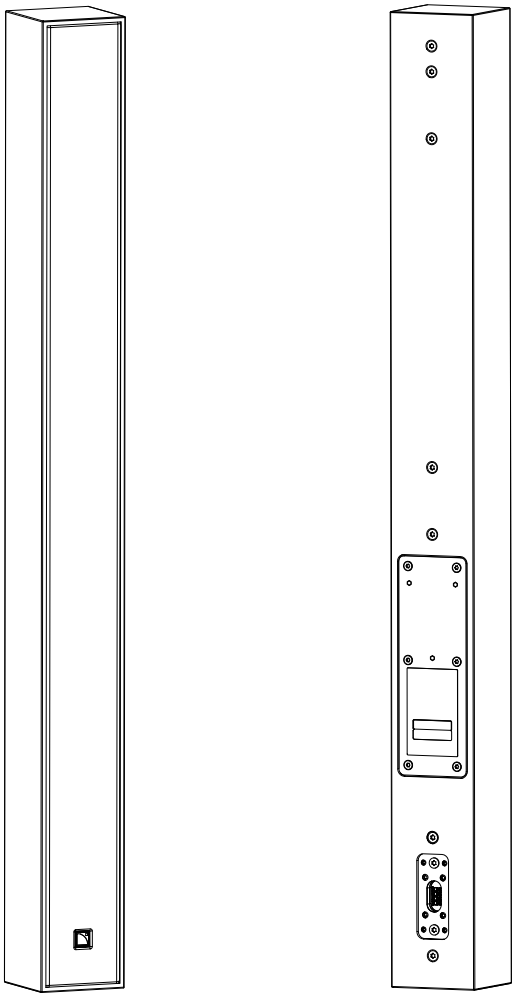

Secondary safety for flown enclosures

Use one insert at the back of the enclosure to implement a secondary safety.

Risk of acoustic leaks

Always put the placeholder screws back in place when the inserts are not in use.

Soka-onW

Soka-onW is a rigging interface with silent blocks for mounting one Soka on a wall in separated configurations. Soka-onW is composed of:

- two surface-mounting plates
- two silent blocks
- fasteners for assembly and safety

The silent blocks isolate the enclosure from the wall to reduce the transmission of vibrations and improve sound quality.

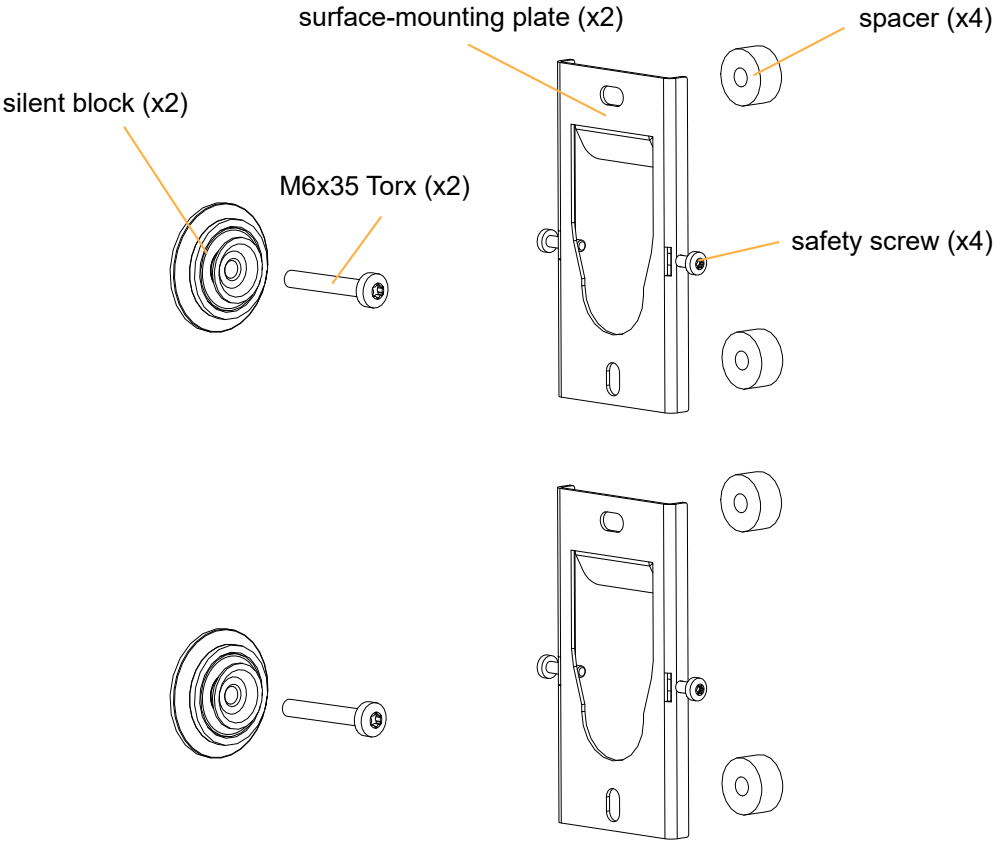

Soka-onW screws and fasteners

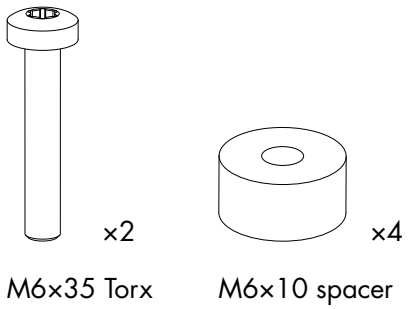

WALLx2

WALLx2 is a rigging interface for mounting one Soka vertically on a wall. WALLx2 is composed of:

- two main parts for mounting on Soka
- two wall-mounting plates
- fasteners for assembly and safety

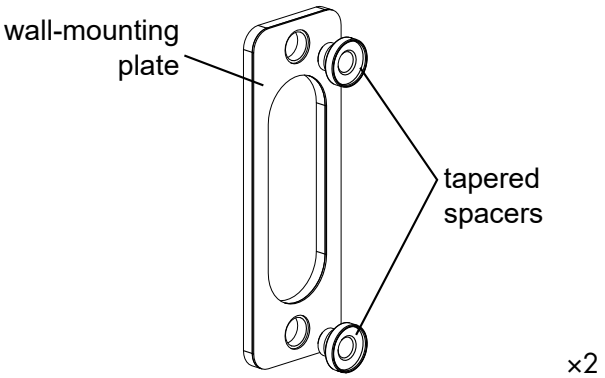

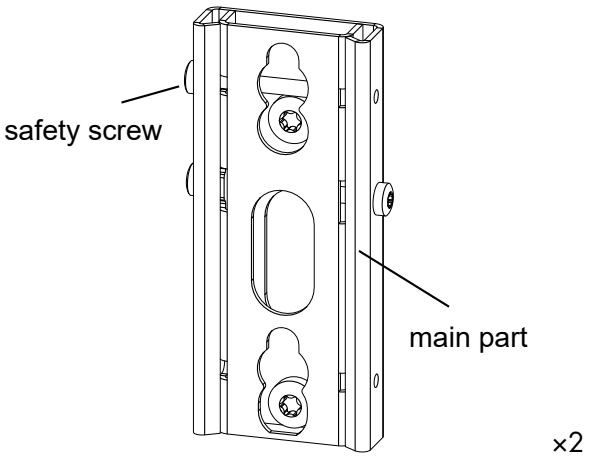

WALLx2 screws and fasteners

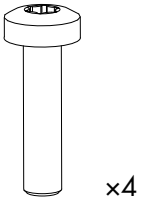

M6×25 Torx

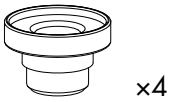

M5 tapered spacer

PANx2

PANx2 is a rigging interface for mounting one Soka vertically on a wall with adjustable azimuth angle. It is composed of two PAN (p.22), without the fasteners for combinations with TILT accessories or horizontal configurations:

- two main parts for mounting on Soka
- two wall-mounting parts
- fasteners for assembly and safety

The azimuth angle can be set between -45° and 45°.

Risk of falling objects

Do not use PAN or PANx2 upside-down.

Do not swap the wall-mounting part(s) and the enclosure-mounting part(s).

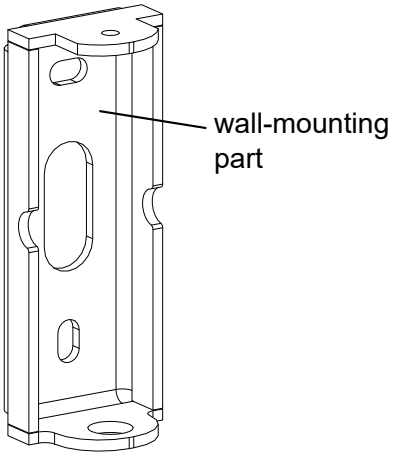

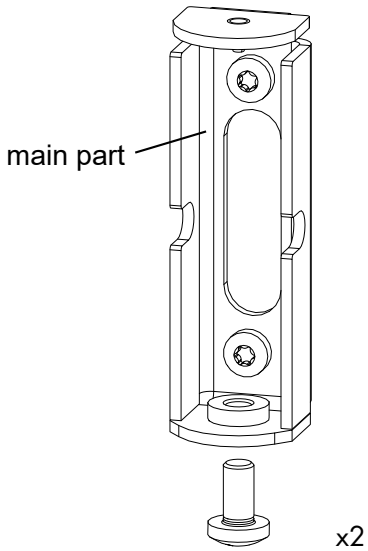

PANx2 screws and fasteners

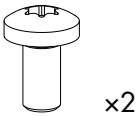

M8×16 Torx

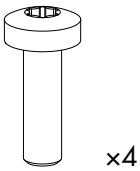

M6×20 Torx

TILT-SUPPORT

TILT-SUPPORT is a support plate for individual Soka wall-mounting accessories. TILT-SUPPORT must be used to ensure the safety of the assembly with PAN or TILT5.

TILT-SUPPORT is composed of:

- a main part with two M5 self-clinching studs
- fasteners for assembly

TILT-SUPPORT features three Ø 6.4 mm / 0.25 in slotted holes for vertical and horizontal adjustment during installation.

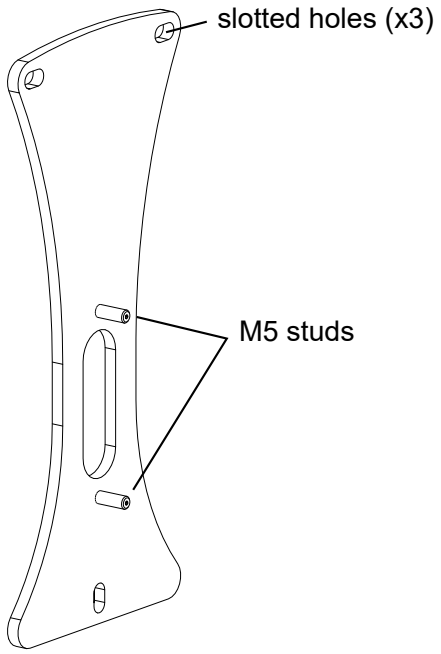

TILT-SUPPORT fasteners

×2

M5 hex locknut

×2

thick plain washer
Ø 5 mm

TILT5

TILT5 is a rigging interface for mounting one Soka with a fixed site angle of 5°. TILT5 must be used in combination with TILT-SUPPORT (p.20) or VBAR (p.23). Optionally, TILT5 can be combined with PAN (p.22) to mount Soka with site and azimuth angle.

TILT5 is composed of:

- a main part for mounting on Soka
- a wall-mounting plate
- a rectangular washer for horizontal configurations
- fasteners for assembly and safety

Risk of falling objects

Do not use TILT, TILT5, TILT15, or TILT40 upside-down. These rigging accessories are designed for negative site angles only.

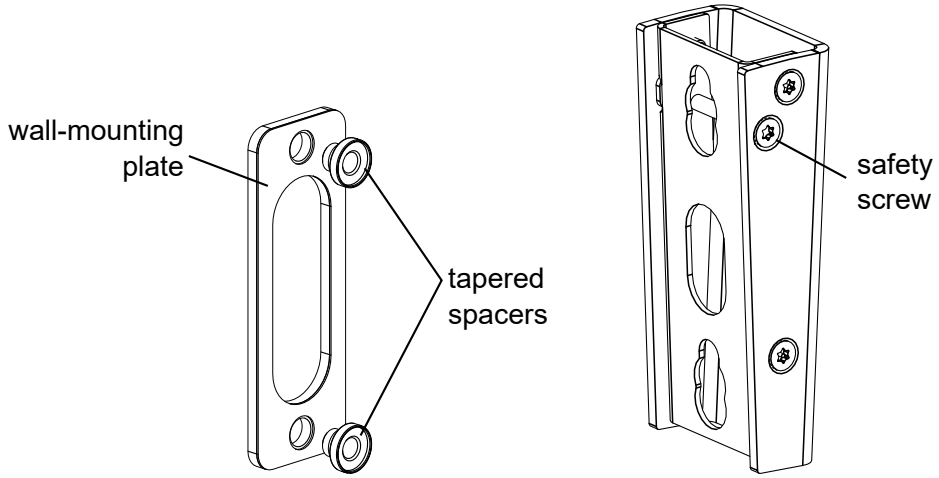

TILT5 screws and fasteners

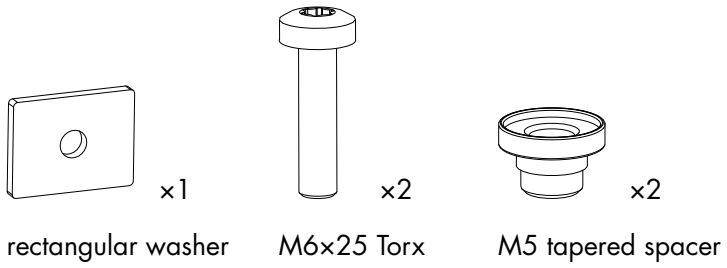

PAN

PAN is a rigging interface for mounting one Soka on a wall with adjustable azimuth angle. It must be used in combination with TILT-SUPPORT (p.20).

PAN can be combined with TILT5 to mount Soka with site and azimuth angle.

The azimuth angle can be set between -45° and 45°.

PAN is composed of:

- a main part for mounting on Soka
- a wall-mounting part
- a rectangular washer (not used)
- fasteners for assembly and safety

Risk of falling objects

Do not use PAN or PANx2 upside-down.

Do not swap the wall-mounting part(s) and the enclosure-mounting part(s).

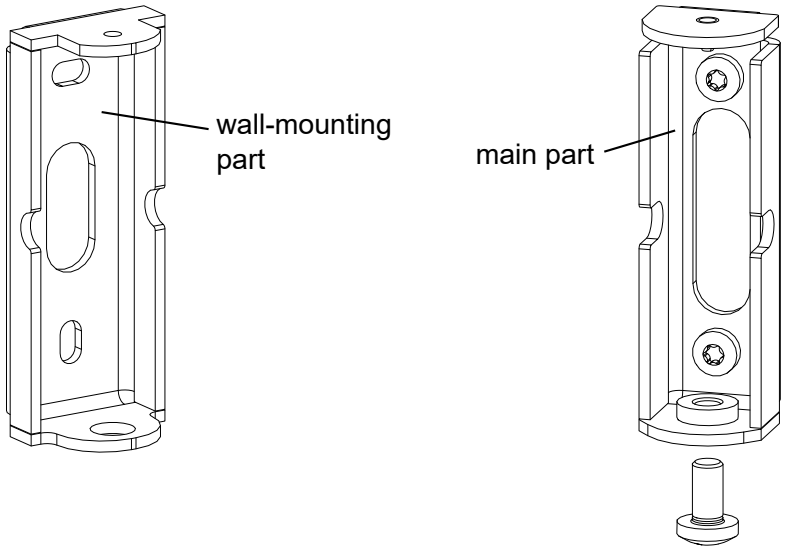

PAN screws and fasteners

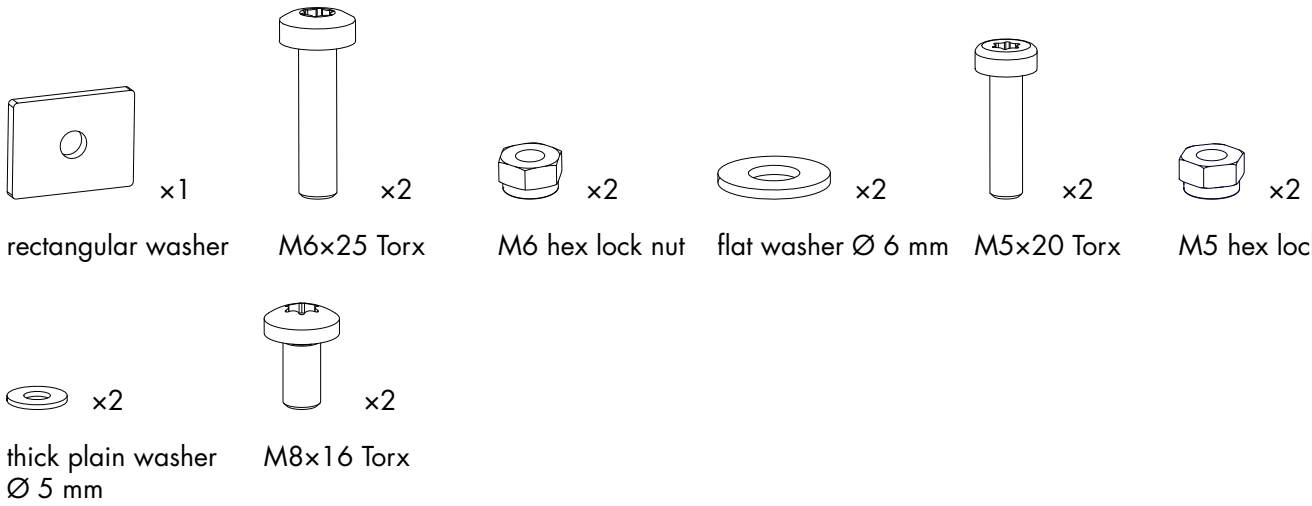

To mount Soka vertically on a wall with adjustable azimuth angle and without site angle setting, use PANx2 (p.19) instead.

VBAR

VBAR is a rigging bracket for mounting Soka vertically on the ceiling, or for flying Soka with a truss or a threaded rod in a suspended ceiling.

VBAR has seven Ø 10.4 mm / 0.41 in possible pickup points for site angle setting in flown configuration. When mounting on the ceiling, drive two screws in holes 1 and 7.

Ceiling-mounting holes

When ceiling-mounting with VBAR, always use holes 1 and 7 (at both ends) to ensure optimal support.

A Ø 9 mm / 0.35 in hole is available at the top of VBAR to run the speaker cable above Soka.

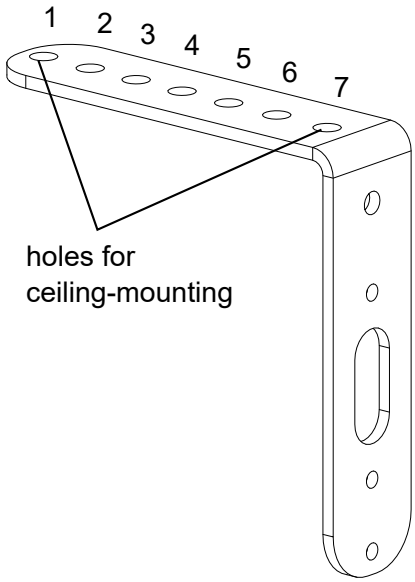

VBAR screws and fasteners

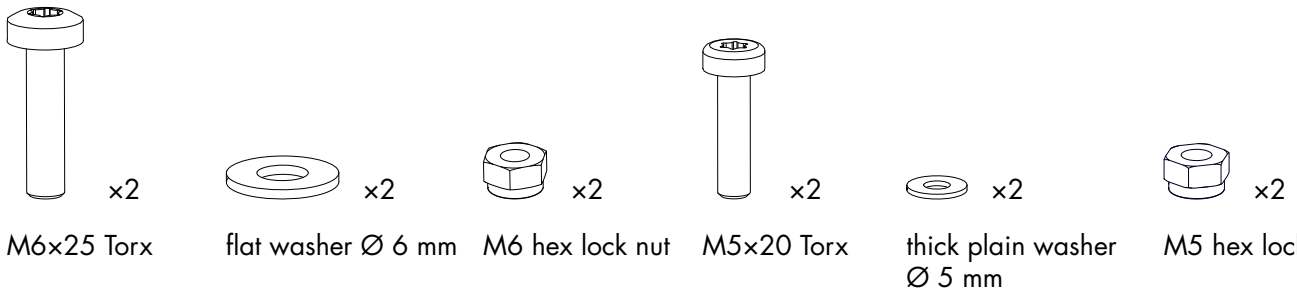

Soka site angles when flown or truss-mounted with VBAR

hole N°	angle
1	11°
2	9°
3	6°
4	4°
5	2°
6	-1°
7	-4°

POLE

POLE is a rigging accessory for mounting Soka on a Ø 35 mm (1-3/8") pole.

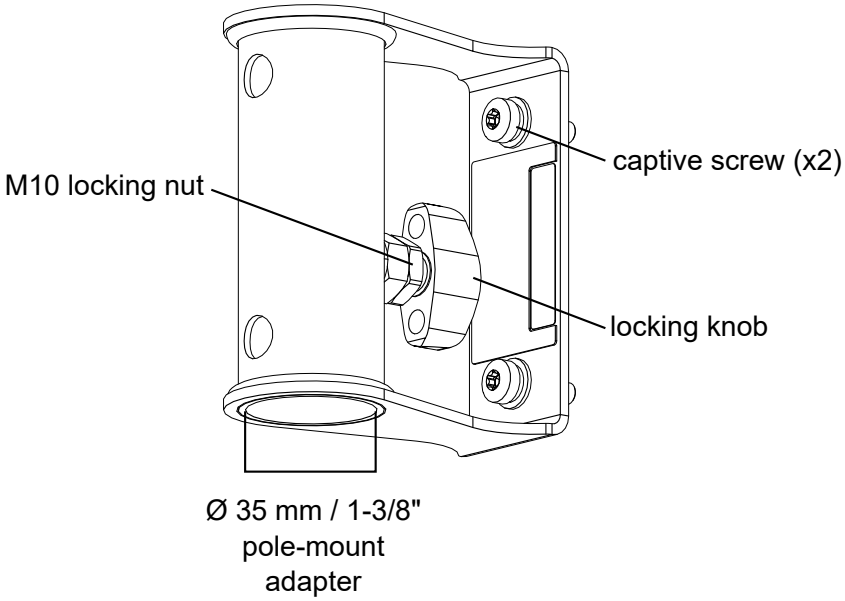

Mechanical safety

Flown configurations

The Soka rigging system complies with EN 62368-1: 2014 Audio/video, information and communication technology equipment — Part 1: Safety requirements.

The deployments described in this manual achieve a safety factor of **5**.

Safe/maximum limit: 1
All the mechanical configurations described in this manual are destined to mount a single Soka.

Risk of injury or product damage
This manual describes all allowed mechanical configurations with Soka and its accessories.
Do not attempt to use these products outside of their intended use.

Soka

configuration	rigging accessory	safe limit / maximum limit
wall-mounted	Soka-onW	1
wall-mounted	TILT-SUPPORT + TILT5 + PAN (optional)	1
wall-mounted	WALLx2	1
wall-mounted	PANx2	1
ceiling-mounted / flown	VBAR	1

Other configurations

Soka

configuration	rigging accessory	safe limit / maximum limit
pole-mounted	POLE	1

Assessing mechanical safety

Mechanical safety of the rigging system
Before any installation, always model the system in Soundvision and check the **Mechanical Data** section for any stress warning or stability warning.

In order to assess the actual safety of any array configuration before implementation, refer to the following warnings:

Rated working load limit (WLL) is not enough
The rated WLL is an indication of the element resistance to tensile stress. For complex mechanical systems such as loudspeaker arrays, WLLs cannot be used per se to determine the maximum number of enclosures within an array or to assess the safety of a specific array configuration.

Mechanical modeling with Soundvision
The working load applied to each linking point, along with the corresponding safety factor, will depend on numerous variables linked to the composition of the array (type and number of enclosures, splay angles) and the implementation of the flying or stacking structure (number and location of flying points, site angle). This cannot be determined without the complex mechanical modeling and calculation offered by Soundvision.

Assessing the safety with Soundvision
The overall safety factor of a specific mechanical configuration always corresponds to the lowest safety factor among all the linking points. Always model the system configuration with the Soundvision software and check the **Mechanical Data** section to identify the weakest link and its corresponding working load. By default, a stress warning will appear when the mechanical safety goes beyond the recommended safety level.

Safety of ground-stacked arrays in Soundvision

For ground-stacked arrays, a distinct stability warning is implemented in Soundvision. It indicates a tipping hazard when the array is not secured to the ground, stage or platform. It is the user's responsibility to secure the array and to ignore the warning.

Additional safety for flown arrays

When flying an array, use available holes to implement a secondary safety.

Considerations must be given to unusual conditions

Soundvision calculations are based on usual environmental conditions. A higher safety factor is recommended with factors such as extreme high or low temperatures, strong wind, prolonged exposition to salt water, etc. Always consult a rigging specialist to adopt safety practices adapted to such a situation.

Loudspeaker configurations

Soka colinear source

In this configuration the system operates over the nominal bandwidth of the enclosure.

The [SOKA] preset delivers a reference frequency response in medium throw applications.

The Soka enclosure is driven by the LA2Xi / LA4X / LA7.16i / LA12X amplified controllers.

Reduced maximum SPL or drive capacity with LA2Xi: refer to the **LA2Xi owner's manual**.

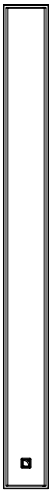

Enclosure	Soka
Preset	[SOKA]
Frequency range (-10 dB)	100 Hz - 20 kHz

Delay values
When combining a line source with subwoofers, delays may have to be added to the presets.
Refer to the Preset Guide to obtain the pre-alignment delay values.

Soka ultra-shallow colinear source with low-frequency element

Deployed as a colinear source with SB6i or SB10i subwoofers, Soka operates with augmented LF resources.

For closely coupled configurations, the [SOKA_200] preset delivers a reference frequency response in medium throw applications, and the [SB6_200] and [SB10_200] presets provide SB6i and SB10i with an upper frequency limit at 200 Hz.

For coupled configurations, the [SOKA] preset delivers a reference frequency response in medium throw applications, and the [SB6_100] and [SB10_100] presets provide SB6i and SB10i with an upper frequency limit at 100 Hz.

For separated configurations, the [SOKA_60] preset provides Soka with a lower frequency limit at 60 Hz, and the [SB6_60] and [SB10_60] presets provide SB6i and SB10i with an upper frequency limit at 60 Hz.

Soka, SB6i, and SB10i are driven by LA2Xi / LA4X / LA7.16i / LA12X.

Soka with SB6i

Closely coupled

With SB6i and the preset [SB6_200], the bandwidth of the Soka system is extended down to 32 Hz. The preset [SOKA_200] provides optimal frequency coupling with the low-frequency element.

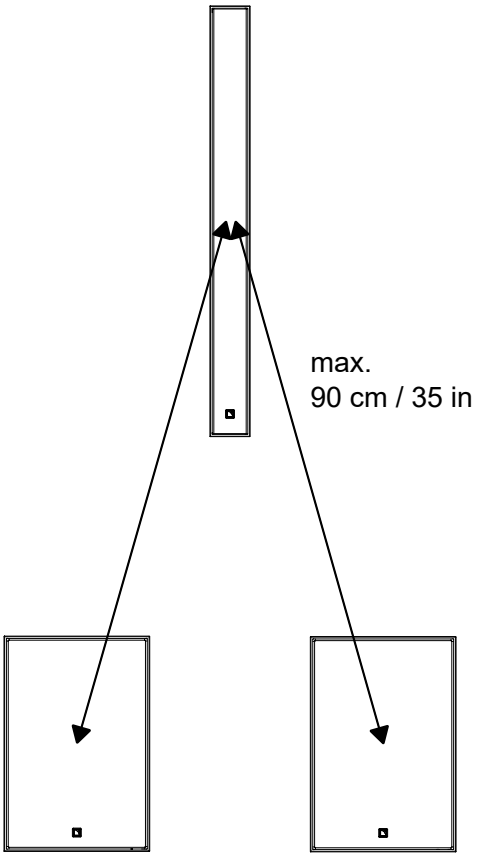

Enclosure	Soka	SB6i
Preset	[SOKA_200]	[SB6_200]
Ratio	1 Soka : 2 SB6i	
Low frequency limit (-10 dB)	32 Hz - 20 kHz	

Delay values
Do not forget to add the pre-alignment and geometric delays depending on the configuration.

Pre-alignement delays

presets	pre-alignment delay values and polarity settings	
[SOKA_200] + [SB6_200]	Soka = 1.9 ms +	SB6i = 0 ms +

Coupled

With SB6i and the preset [SB6_100], the bandwidth of the Soka system is extended down to 29 Hz. The preset [SOKA] provides optimal frequency coupling with the low-frequency element.

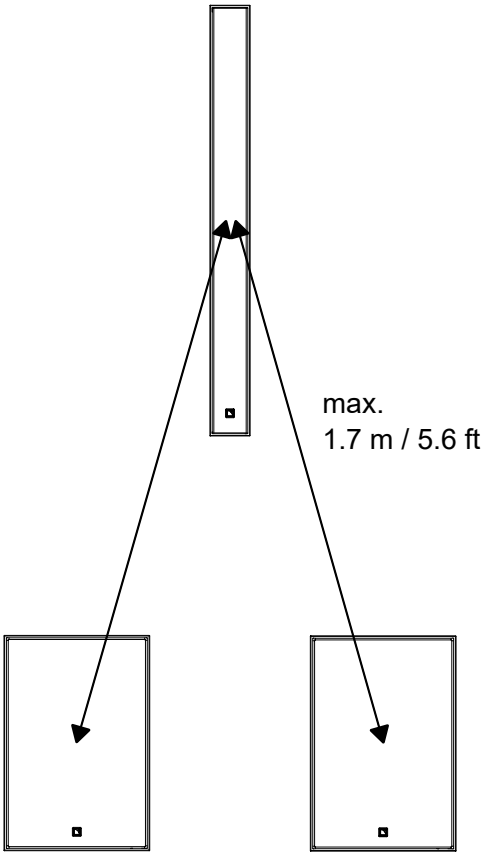

Enclosure	Soka	SB6i
Preset	[SOKA]	[SB6_100]
Ratio	1 Soka : 2 SB6i	
Low frequency limit (-10 dB)	29 Hz - 20 kHz	

Delay values
Do not forget to add the pre-alignment and geometric delays depending on the configuration.

Pre-alignement delays

presets	pre-alignment delay values and polarity settings	
[SOKA] + [SB6_100]	Soka = 1.4 ms +	SB6i = 0 ms +

Separated

With SB6i and the preset [SB6_60], the bandwidth of the Soka system is extended down to 29 Hz and the contour is reinforced by 6 dB* at 50 Hz (peak low-end SPL). The preset [SOKA_60] provides optimal frequency coupling with the low-frequency element.

on-wall

reinforced contour

+ 6 dB* at 50 Hz

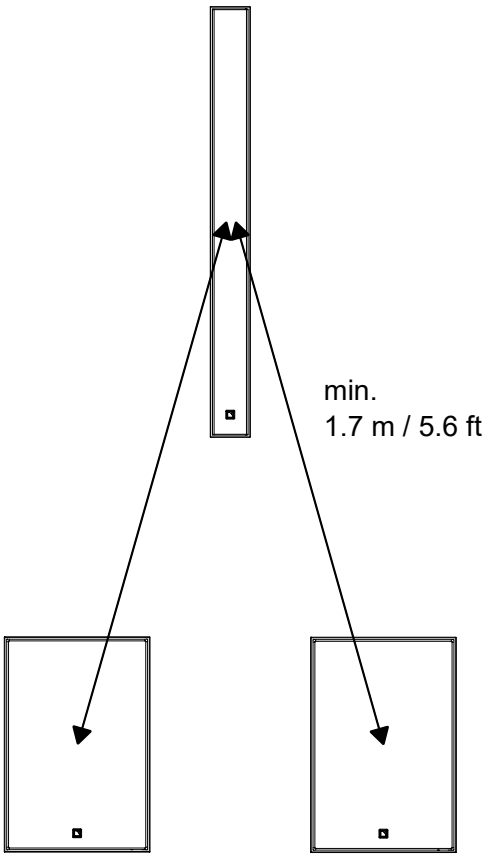

Enclosure	Soka	SB6i
Preset	[SOKA_60]	[SB6_60]
Ratio	1 Soka : 2 SB6i	
Low frequency limit (-10 dB)	29 Hz - 20 kHz	

Delay values
Do not forget to add the pre-alignment and geometric delays depending on the configuration.

Pre-alignement delays

presets	**pre-alignment delay values and polarity settings**	
[SOKA_60] + [SB6_60]	Soka = 3.6 ms +	SB6i = 0 ms -

* Contour value takes into account the effect of the wall and floor on the contour.

Soka with SB10i

Closely coupled

With SB10i and the preset [SB10_200], the bandwidth of the Soka system is extended down to 29 Hz and the system contour is reinforced by 4 dB* at 50 Hz. The preset [SOKA_200] provides optimal frequency coupling with the low-frequency element.

on-wall

reinforced contour

+ 4 dB* at 50 Hz

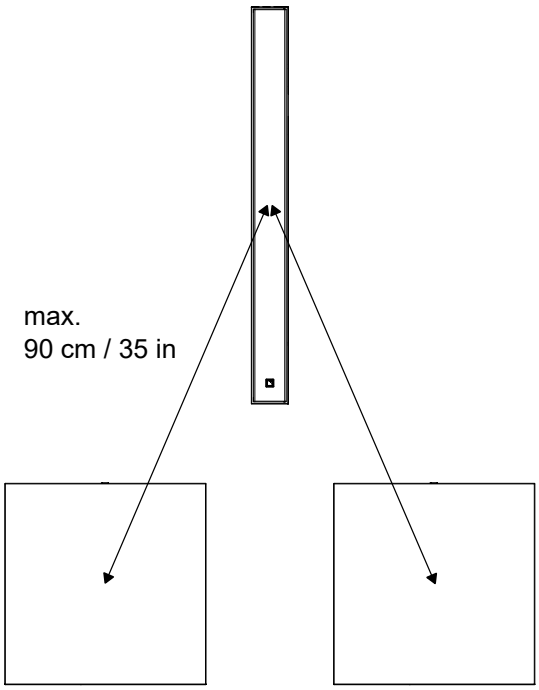

Enclosure	Soka	SB10i
Preset	[SOKA_200]	[SB10_200]
Ratio	1 Soka : 2 SB10i	
Low frequency limit (-10 dB)	29 Hz - 20 kHz	

Delay values
Do not forget to add the pre-alignment and geometric delays depending on the configuration.

Pre-alignement delays

presets	**pre-alignment delay values and polarity settings**	
[SOKA_200] + [SB10_200]	Soka = 3.2 ms +	SB10i = 0 ms +

* Contour value takes into account the effect of the wall and floor on the contour.

Coupled

With SB10i and the preset [SB10_100], the bandwidth of the Soka system is extended down to 27 Hz and the system contour is reinforced by 4 dB* at 50 Hz. The preset [SOKA] provides optimal frequency coupling with the low-frequency element.

on-wall

reinforced contour

+ 4 dB* at 50 Hz

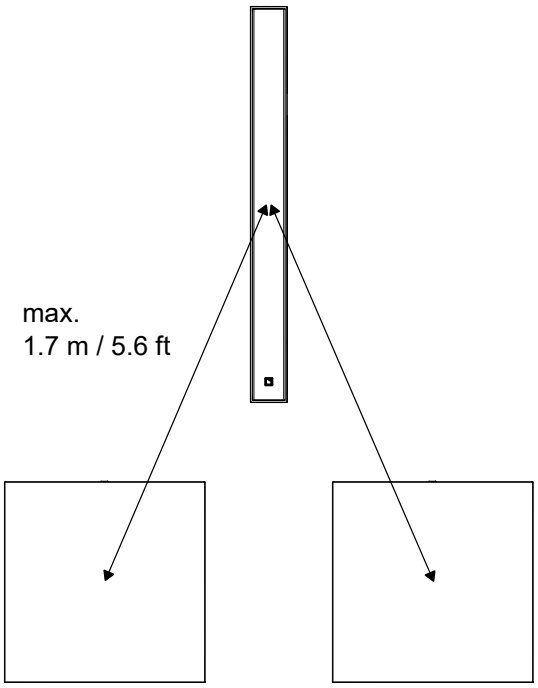

Enclosure	Soka	SB10i
Preset	[SOKA]	[SB10_100]
Ratio	1 Soka : 2 SB10i	
Low frequency limit (-10 dB)	27 Hz - 20 kHz	

Delay values

Do not forget to add the pre-alignment and geometric delays depending on the configuration.

Pre-alignement delays

presets	**pre-alignment delay values and polarity settings**	
[SOKA] + [SB10_100]	Soka = 2.6 ms +	SB10i = 0 ms +

* Contour value takes into account the effect of the wall and floor on the contour.

Separated

With SB10i and the preset [SB10_60], the bandwidth of the Soka system is extended down to 25 Hz and the system contour is reinforced by 5 dB* at 50 Hz. The preset [SOKA_60] provides optimal frequency coupling with the low-frequency element.

on-wall

reinforced contour

+ 5 dB* at 50 Hz

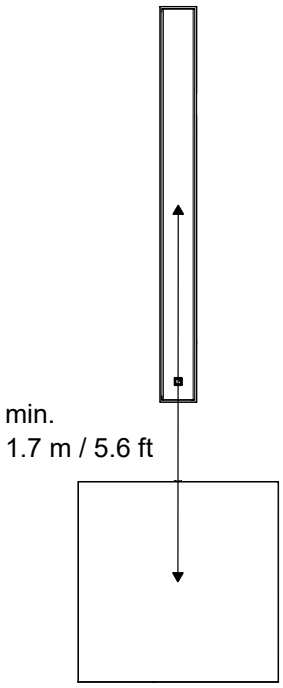

Enclosure	Soka	SB10i
Preset	[SOKA_60]	[SB10_60]
Ratio	1 Soka : 1 SB10i	
Low frequency limit (-10 dB)	25 Hz - 20 kHz	

Delay values
Do not forget to add the pre-alignment and geometric delays depending on the configuration.

Pre-alignement delays

presets	**pre-alignment delay values and polarity settings**	
[SOKA_60] + [SB10_60]	Soka = 9 ms +	SB10i = 0 ms -

* Contour value takes into account the effect of the wall and floor on the contour.

Inspection and preventive maintenance

How to do preventive maintenance

Inspect the system after any corrective maintenance operation.

Perform preventive maintenance at least once a year.

Rigging and hardware

Perform the Rigging part inspection (p.35) on each rigging part.

Use the Mechanical system overview (p.35) to identify critical parts of the system.

If any parts are damaged, contact your L-Acoustics representative for further instructions.

Acoustics

Perform the Enclosure check (p.37).

Perform the Listening test (p.39) to detect any degradation in sound quality.

If necessary, refer to the Corrective maintenance (p.86) section for speaker repair kits and maintenance instructions.

Rigging part inspection

About this task

The term "rigging part" comprises:

- lifting accessories such as clamps and shackles
- rigging accessories such as rigging frames, rigging interfaces, and brackets
- fasteners used for assembling two products together such as ball-locking pins, rigging axes, and safety pins
- rigging plates mounted on enclosures and their rigging screws
- screens mounted on enclosures

This inspection procedure covers only L-Acoustics products. To inspect other products that are part of the lifting chain, refer to the manufacturer's instructions.

Prerequisite

Perform the inspection in a well-lit environment.

Procedure

1. Check that the rigging part is present.
2. Check for:
   - corrosion
   - wear and cracks
   - bends and dents
   - holes
   - missing safety cues
   - missing identification labels
   - missing or loose fasteners

   Replacing screws
   If a screw is loose, remove and replace it.
   Always use the new screws provided in the repair kit.
   If no new screw is available, add blue threadlocker before reusing the screw.
   Do not apply more than the indicated torque.
3. Check the geometry of the part to identify critical deformations.

What to do next

If a problem is detected, perform the authorized maintenance operations or contact your L-Acoustics representative.

Mechanical system overview

Critical parts of the lifting chains are highlighted.

The indicates a visual inspection.

Perform the Rigging part inspection (p.35) on critical parts.

Replacing screws
If a screw is loose, remove and replace it.
Always use the new screws provided in the repair kit.
If no new screw is available, add blue threadlocker before reusing the screw.
Do not apply more than the indicated torque.

Soka mounted on a wall with Soka-onW

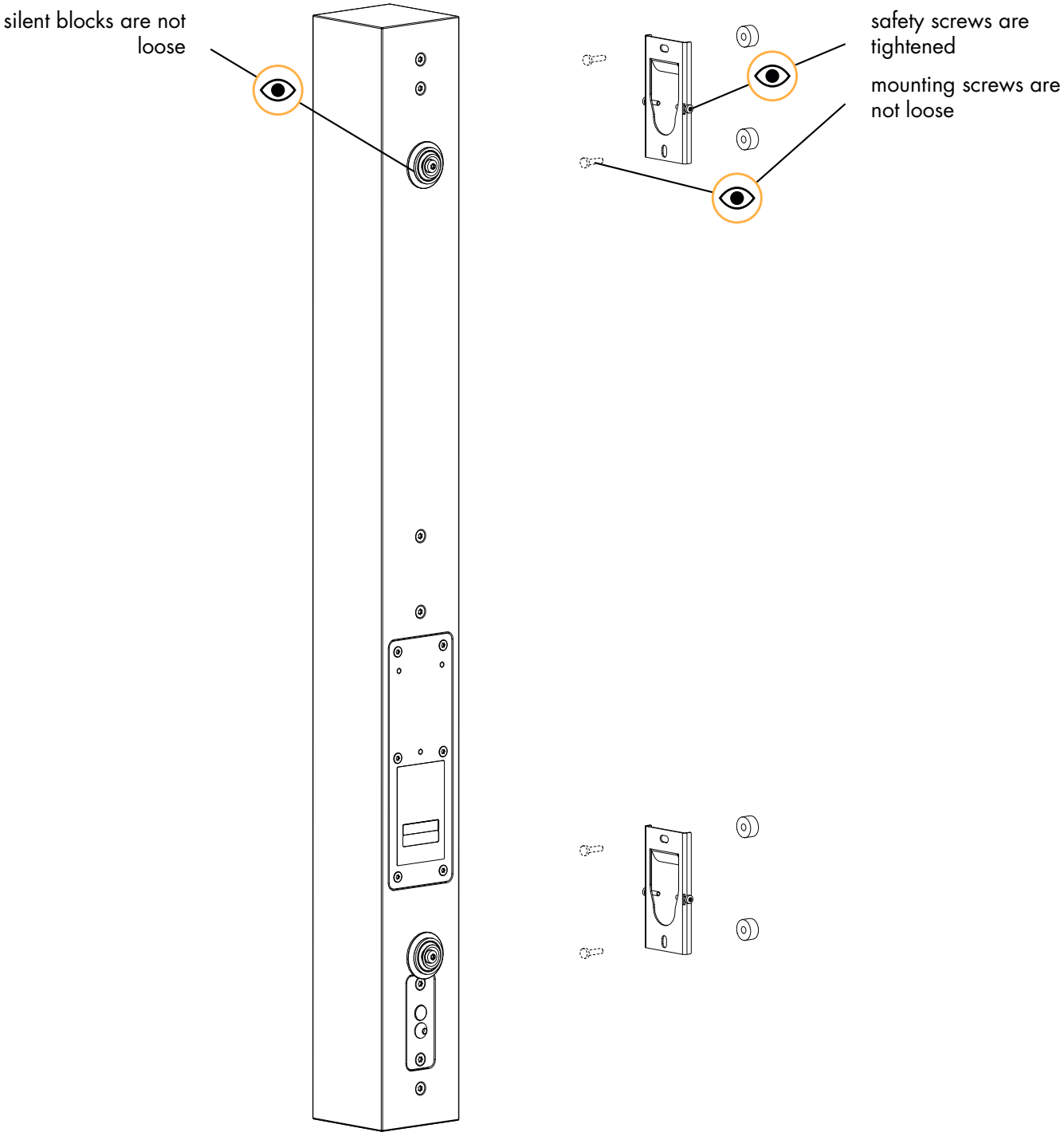

Acoustical check

Enclosure check

This feature is available on:
LA4X
LA12X

ENCLOSURE CHECK measures impedance at the reference frequencies for the connected loudspeaker family. The measured impedance is compared to the expected range allowing for fast detection of loudspeakers presenting circuit continuity issues.

The results can be used for preliminary diagnosis but cannot replace a comprehensive quality control.

Prerequisite

ENCLOSURE CHECK measurements can only be reliable if the following requirements are met:

Environment and temperature:
- Ambient temperature must be comprised between 0 °C / 32 °F and 40 °C / 104 °F. Ideal temperature is 20 °C / 68 °F.
- Enclosures must be at room temperature. If warm from a recent high level use or recently moved from a cold environment, let the loudspeakers reach room temperature before starting.

Enclosures:
- Enclosures must be included in the embedded factory preset library.
- Enclosures must be in nominal operating conditions:
  - Remove covers or dollies obstructing the loudspeakers or the vents.
  - Check for obvious physical damage or air leak: visually inspect the grill, gasket, cabinet, and connector plate for loose, missing or damaged parts.

Connection:
- Use only 10 m / 30 ft 4 mm² / AWG 11 speaker cables.
- Do not connect enclosures in parallel.

Amplified controllers:
- LA4X must run at least firmware version 1.1.0.
- LA4X load sensors must be calibrated. Refer to the **Load Sensor Calibration Tool** technical bulletin for more information.
- LA4X must warm up for at least 10 minutes after power up. Do not power off, reboot or switch to standby mode to avoid resetting the countdown.
- Load a preset corresponding to the connected loudspeaker's family. Presets from the user memories may be used on condition they are made of presets supported in the embedded factory preset library.

Procedure

1. Power up the amplified controller. Let LA4X warm up for at least 10 minutes.
2. Connect the loudspeaker enclosures to the amplified controller.
3. Load a preset from or built from the embedded library corresponding to the connected loudspeaker family.
4. On the amplified controller, use the encoder wheel to select **MONITORING & INFO**. Press the OK key or the encoder wheel to validate.
5. Use the encoder wheel to select **ENCLOSURE CHECK**.

   Beware of sound levels.
   Although the sound pressure levels generated for the ENCLOSURE CHECK are moderate, do not stay within close proximity of the loudspeakers and consider wearing ear protection.
6. Press the OK key or the encoder wheel to launch the ENCLOSURE CHECK.

   The amplified controller generates short sinusoidal signals simultaneously for each connected output.

   The amplified controller displays the results for each output.

7. Depending on the displayed results, follow the instructions in the table.

result	interpretation	instructions
OK	measured impedance is within expected range	enclosure is in working order electrically
?	unsupported preset family	only supported enclosures should be tested
NC	Not Connected	if cables are connected: **a.** inspect the cables and connections **b.** go to step 8 (p.38)
NOK	measured impedance is not within expected range	**a.** check that all the prerequisites are met, in particular that the loaded preset corresponds to the connected speaker's family **b.** inspect the cables and connections **c.** go to step 8 (p.38)
UNDEF	measured impedance is undefined	

8. Under NC, NOK and UNDEF results, press and hold the corresponding OUT key.

The amplified controller displays:

- the tested frequencies,
- information on the measured impedance:
  - OPEN for open circuit (found in NC results),
  - SHORT for short circuit (found in NOK results), or
  - a percentage of variation from the expected range (found in NOK and UNDEF results)
- the number of operational transducers out of the total

Low variations from the expected range are acceptable: displayed percentage can be different from 0 and all transducers considered operational.

Listening test

enclosure	preset	usable bandwidth
Soka	[SOKA]	100 Hz - 20 kHz

Procedure

1. Load the preset on an LA2Xi / LA4X / LA7.16i / LA12X amplified controller.
2. Connect a sine wave generator to the amplified controller.

   Risk of hearing damage
   Set a low sound level to start and use ear protection to adjust before testing.
3. Scan the bandwidth focusing on the usable range.
   The sound should remain pure and free of unwanted noise.
4. Focus on the 35 Hz frequency.
   The sound should remain pure and free of unwanted noise.

Troubleshooting for LF speakers

One or more LF speaker produces distorted, buzzing, rubbing, clicking, muffled or weak sound.

Possible causes

- The screws are not tightened with the appropriate torque.
- There is an air leak in the gasket.
- There is dust on the cone.
- The cone is damaged.
- The surround is torn or delaminated.
- The voice coil or the spider is damaged.

Procedure

1. Perform the speaker disassembly procedure.
2. Visually inspect the cables and the connectors.
3. Visually inspect the speaker cone, the voice coil and the spider.

   If any damage is visible, replace the speaker.
4. Carefully clean the speaker with a dry cloth.
5. Perform the reassembly procedure.
   Replace the speaker gasket and the screws.
   Apply the recommended torque.
6. Repeat the listening test.

   If the problem persists, replace the speaker.

Troubleshooting for installation enclosures

One or more enclosure produces a high-pitched, leaking air sound.

Possible cause

- Placeholder screws are missing.

Procedure

Visually inspect the screws on each side of the enclosures.
Secure placeholder screws in the empty inserts.

Rigging procedures

Tools

Before rigging this product, make sure all the tools listed are available. References are given for FACOM® products in this table. Other manufacturers can be used.

name	reference	distributor
set of 6-point 1/4" sockets	RL.NANO1 / R.360NANO	FACOM
torque screwdriver (2 - 10 N.m)	A.404	FACOM

Wall-mounting with Soka-onW

Type of deployment	wall-mounting
Rigging accessories	Soka-onW
Additional material	4 compatible screws and anchors
Tools	torque screwdriver
	T30 Torx bit
	T20 Torx bit
Min. number of operators	1

Secondary safety for flown enclosures

Use one insert at the back of the enclosure to implement a secondary safety.

Risk of crushing injury

Ensure that the wall or ceiling can support the load of the product.

It is recommended to mount only on solid structures. If mounting on a hollow structure (such as a wall cavity), place anchoring points on the framework (wall studs, ceiling joists), or reinforce the mounting area.

Select screws and anchors applicable to the wall or ceiling properties and to the load of the product. Prevent screws from loosening over time, using for example thread locker or lock washers.

Specifications for screws and anchors

deployment	accessory	ultimate tensile load per screw (daN)	ultimate shear load per screw (daN)	screws quantity	mounting hole size	specific constraints
wall-mounting	Soka-onW	4	4	4	∅ 6.4 mm / 0.25 in (slotted)	total thickness with spacers: 11.50 mm / 0.45 in

Screws and fasteners

from Soka-onW

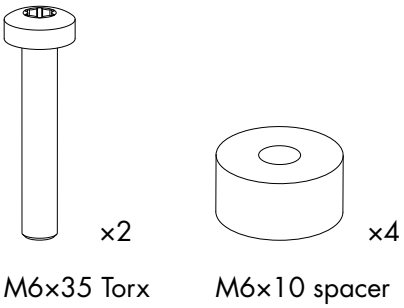

Assembly

Procedure

1. Drill holes in the wall for the anchors and for the cable exit(s).

   Make sure to leave enough space between the walls and the sides of the rigging element to access the safety screw(s) when the enclosure is mounted.

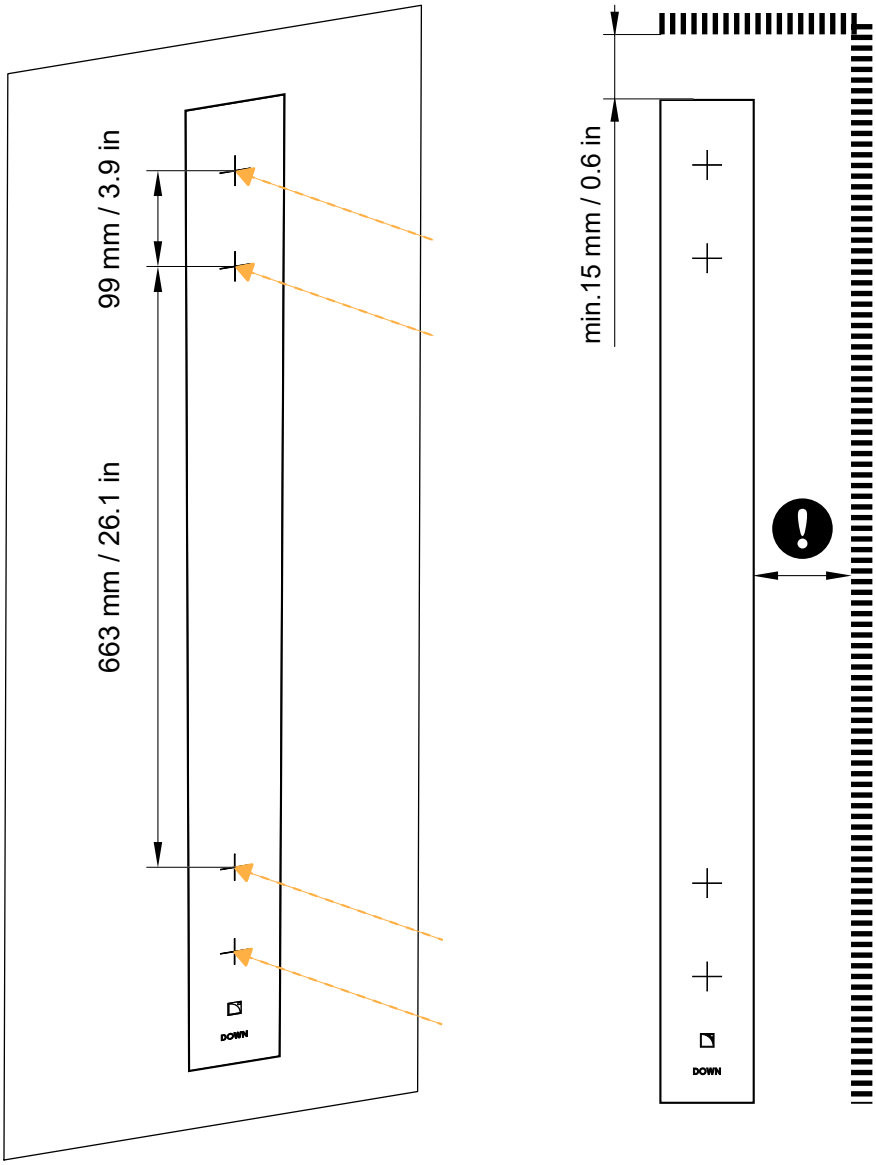

2. Secure the surface-mounting plate on the wall, using the four spacers.

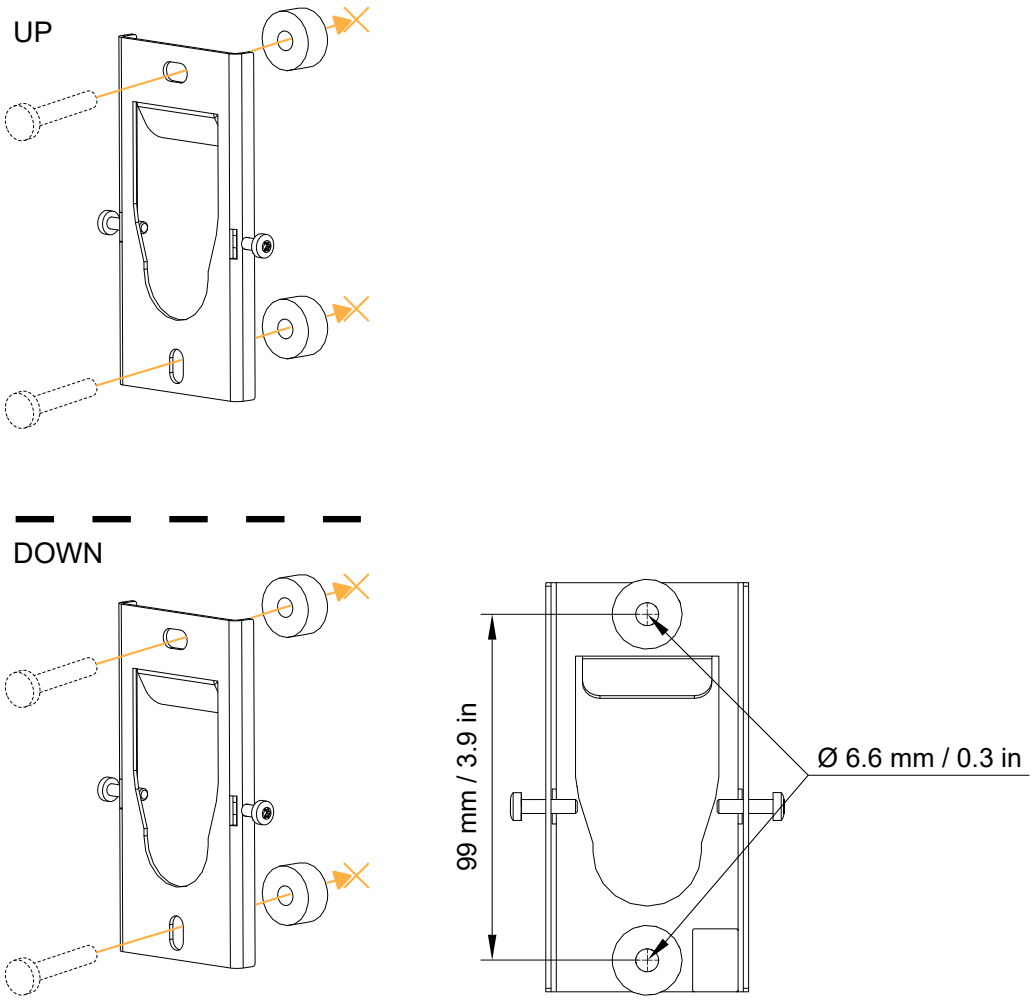

3. Remove the two placeholder screws from the back of Soka.

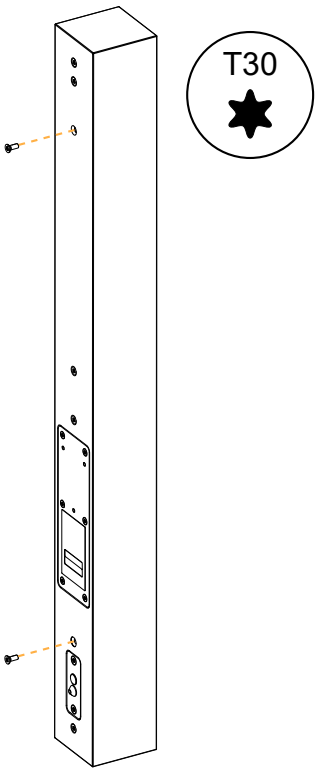

4. Mount the silent blocks to Soka with the two M6x35 Torx screws.

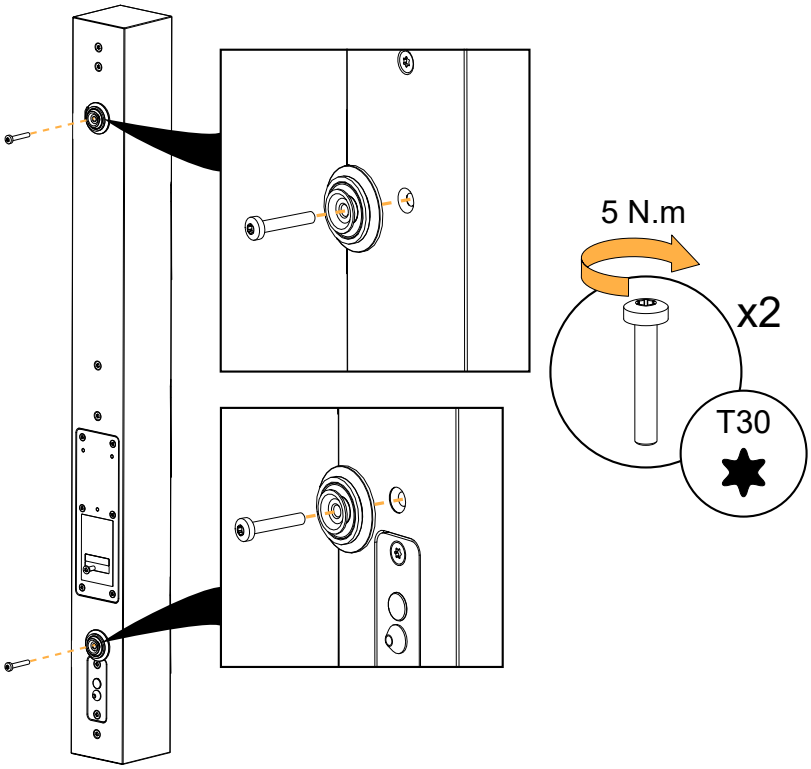

5. Prepare the cabling. Refer to Cabling Soka (p.80).

6. Mount the assembly on the surface-mounting plates.

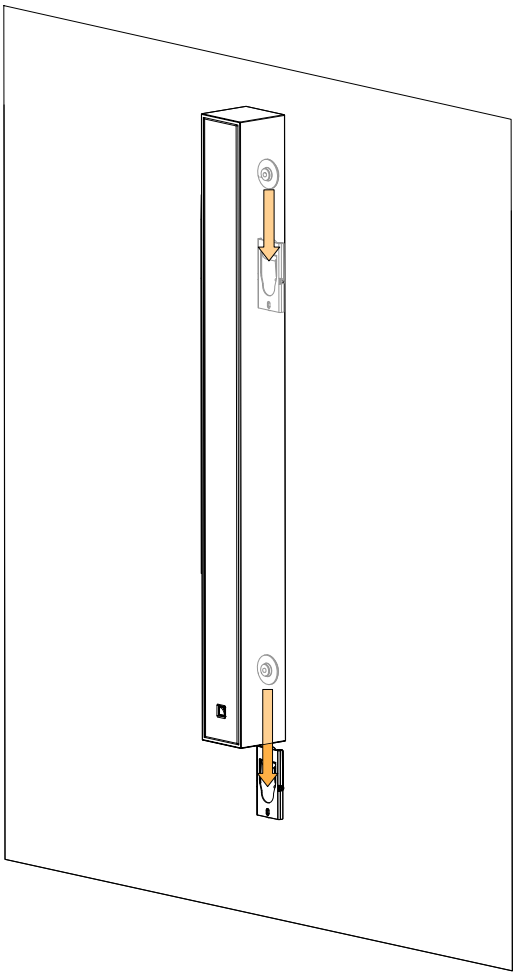

7. Tighten the safety screws on both sides and make sure the assembly is stable.

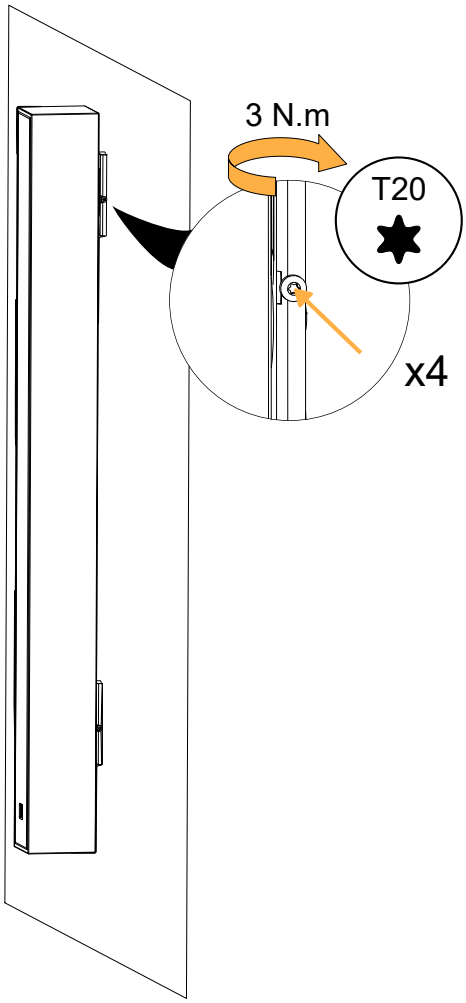

Wall-mounting with WALLx2

Type of deployment	wall-mounting
Rigging accessories	WALLx2
Additional material	4 compatible screws and anchors
Tools	torque screwdriver
	T30 Torx bit
	T20 Torx bit
Min. number of operators	1

Secondary safety for flown enclosures

Use one insert at the back of the enclosure to implement a secondary safety.

Risk of crushing injury

Ensure that the wall or ceiling can support the load of the product.

It is recommended to mount only on solid structures. If mounting on a hollow structure (such as a wall cavity), place anchoring points on the framework (wall studs, ceiling joists), or reinforce the mounting area.

Select screws and anchors applicable to the wall or ceiling properties and to the load of the product. Prevent screws from loosening over time, using for example thread locker or lock washers.

Specifications for screws and anchors

deployment	accessory	ultimate tensile load per screw (daN)	ultimate shear load per screw (daN)	screws quantity	mounting hole size	specific constraints
wall-mounting	WALLx2	4	4	4	Ø 5.2 mm / 0.20 in	maximum screw head size: Ø 11 mm / 0.43 in

Screws and fasteners

from WALLx2

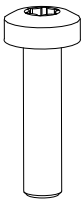

×4

M6×25 Torx

×4

M5 tapered spacer

Assembly

About this task

For this configuration, the speaker cable must be run inside the wall.

Prerequisite

Place Soka on its front face on a clean flat surface.

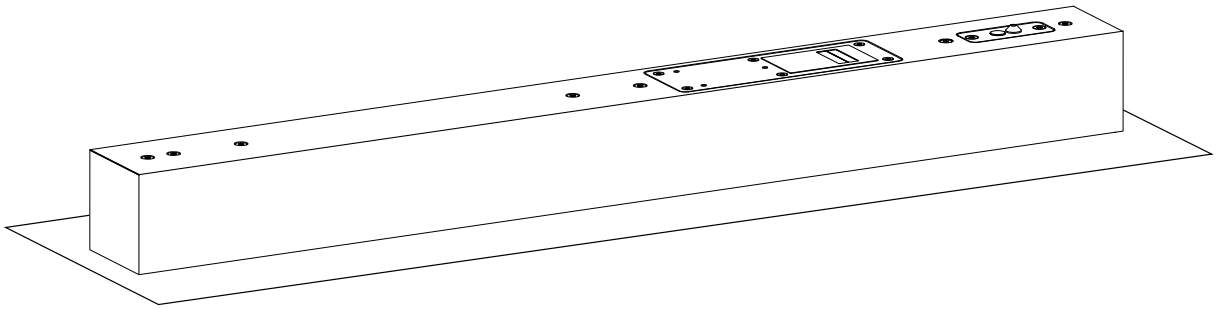

Make sure that the WALLx2 safety screws are loosened.

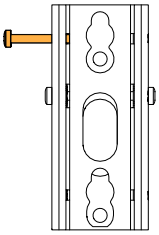

Procedure

1. Drill holes in the wall for the anchors and for the cable exit(s).

   Use the provided drilling template.

   Make sure to leave enough space between the walls and the sides of the rigging element to access the safety screw(s) when the enclosure is mounted.

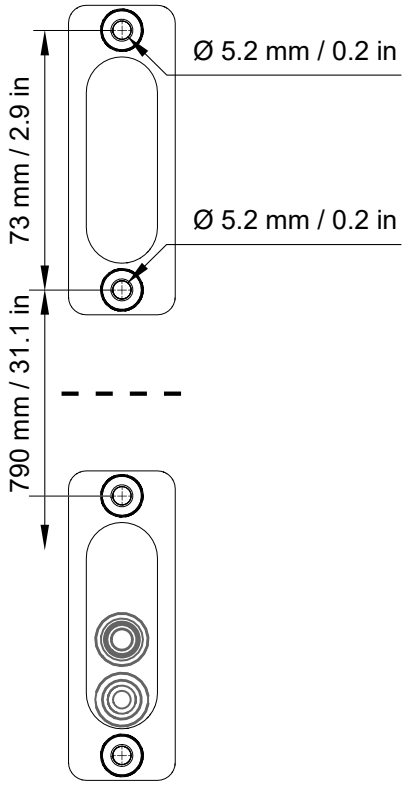

2. Run the speaker cable inside the wall.

3. Secure the two wall-mounting plates to the wall with the four tapered spacers.

The gaskets are facing away from the wall.

Run the speaker cable through the bottom wall-mounting plate.

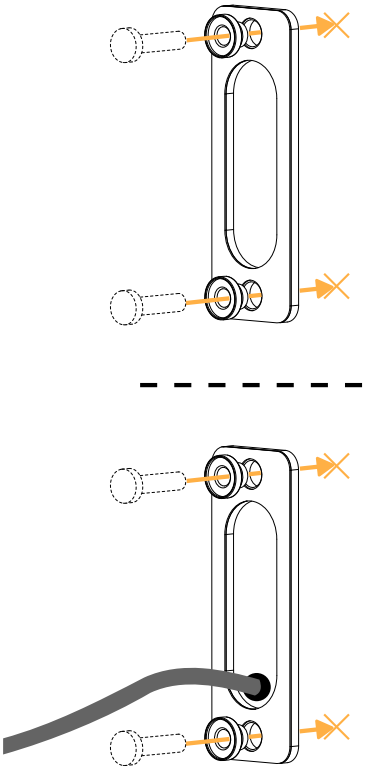

4. Secure the bottom WALLx2 part to X8i:

a) Remove the connector sealing plate (if present) or the placeholder screws.

b) Run the cable through the WALLx2 part and through the connector sealing plate.

c) Connect the speaker cable to the Soka terminal block. Refer to Cabling Soka (p.80).

d) Secure the WALLx2 part and the connector sealing plate to Soka.

Use two M6×25 Torx screws.

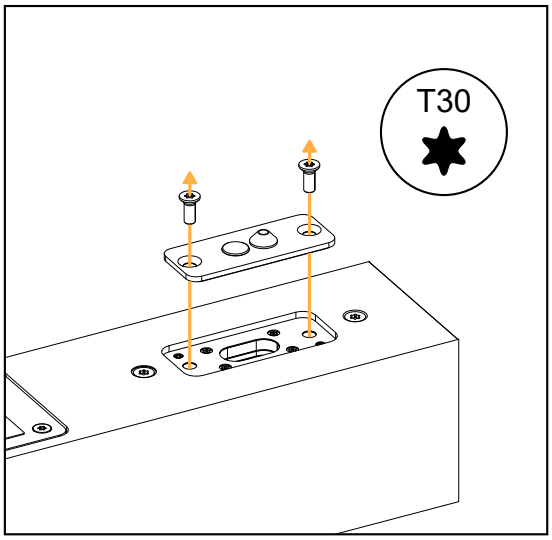

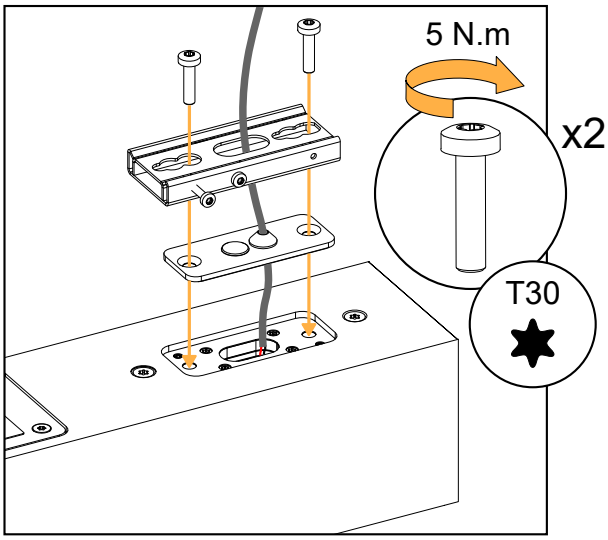

5. Secure the top WALLx2 part to Soka:

a) Remove the two top placeholder screws.

b) Secure the WALLx2 part to Soka.

Use two M6×25 Torx screws.

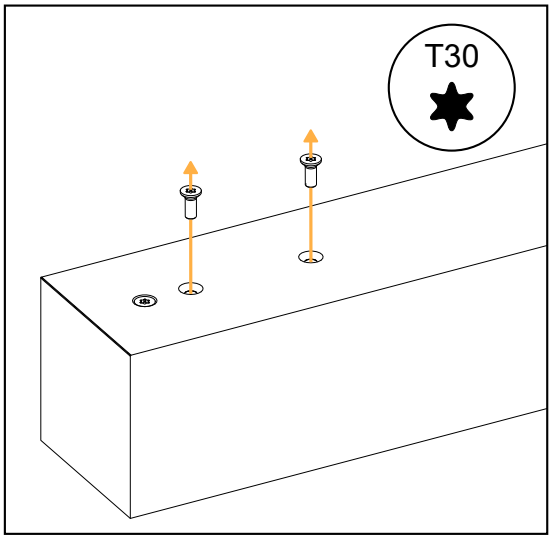

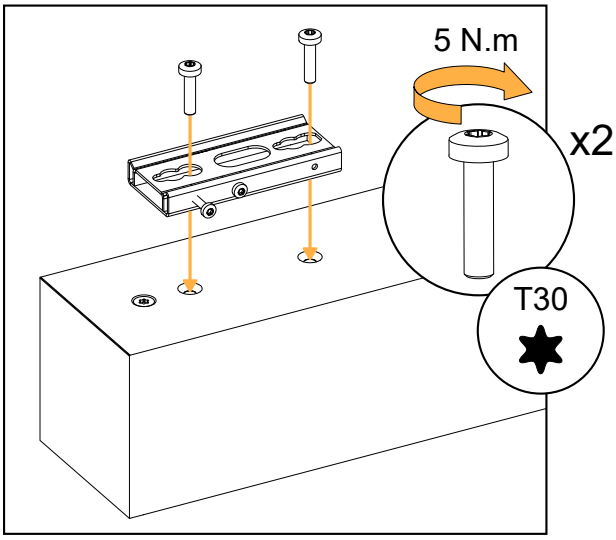

6. Mount Soka to the wall-mounting plates:

a) Align the midpoints of the WALLx2 rear cutouts with the tapered spacers.

b) Push Soka downwards.

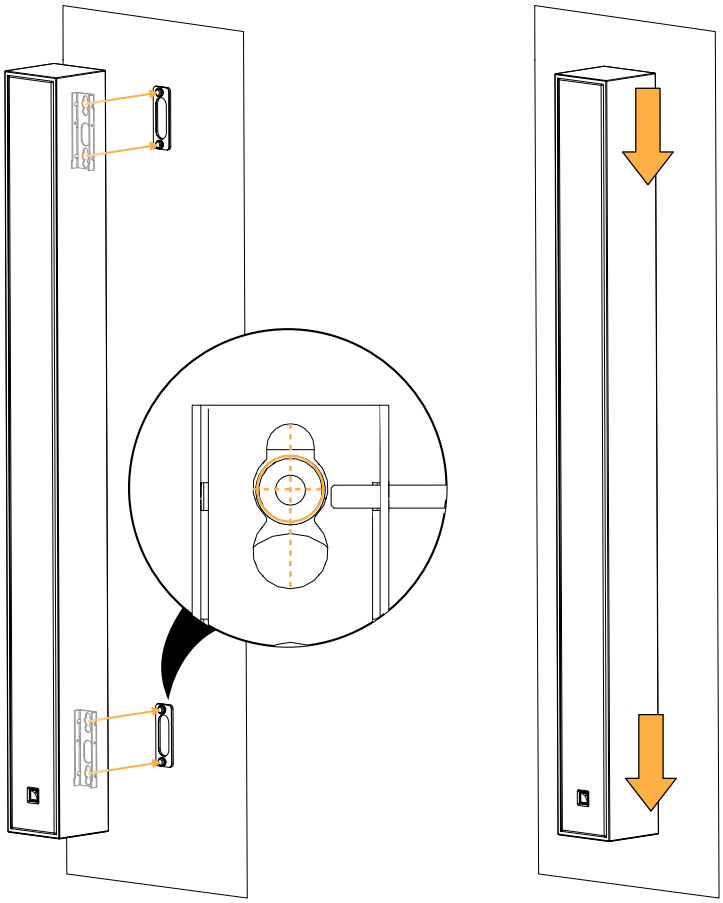

7. Tighten the two safety screws and make sure the assembly is stable.

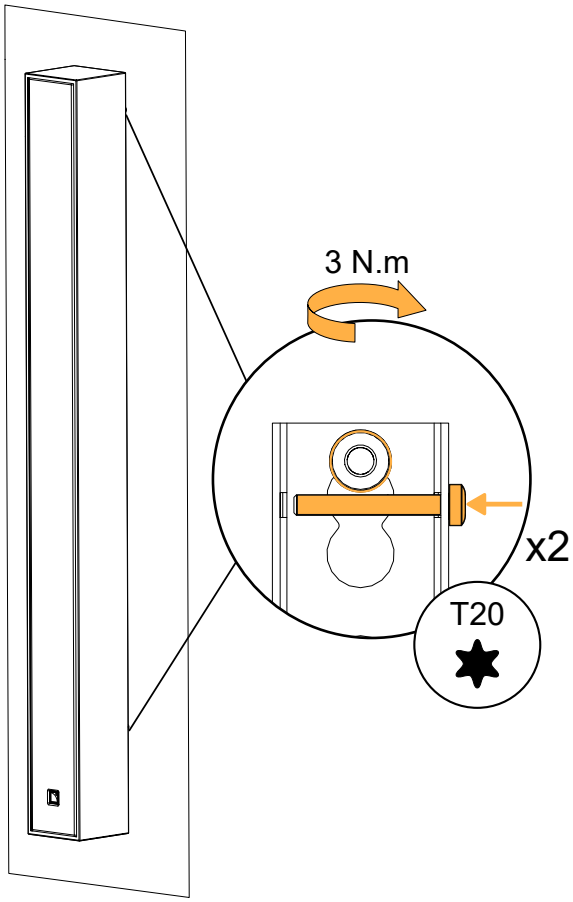

Wall-mounting with PANx2

Type of deployment	wall-mounting
Rigging accessories	PANx2
Additional material	4 compatible screws and anchors
Tools	torque screwdriver
	T30 Torx bit
	T40 Torx bit
Min. number of operators	1

Secondary safety for flown enclosures

Use one insert at the back of the enclosure to implement a secondary safety.

Risk of crushing injury

Ensure that the wall or ceiling can support the load of the product.

It is recommended to mount only on solid structures. If mounting on a hollow structure (such as a wall cavity), place anchoring points on the framework (wall studs, ceiling joists), or reinforce the mounting area.

Select screws and anchors applicable to the wall or ceiling properties and to the load of the product. Prevent screws from loosening over time, using for example thread locker or lock washers.

Specifications for screws and anchors

deployment	accessory	ultimate tensile load per screw (daN)	ultimate shear load per screw (daN)	screws quantity	mounting hole size	specific constraints
wall-mounting	PANx2	4	4	4	Ø 6.4 mm / 0.25 in (slotted)	–

Risk of falling objects

Do not use PAN or PANx2 upside-down.

Do not swap the wall-mounting part(s) and the enclosure-mounting part(s).

Screws and fasteners

from PANx2

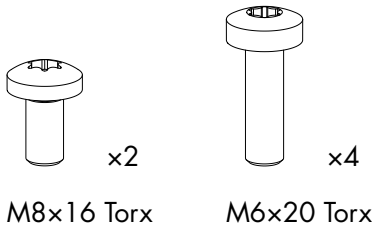

Assembly

About this task

For this configuration, the speaker cable must be run inside the wall.

Prerequisite

Place Soka on its front face on a clean flat surface.

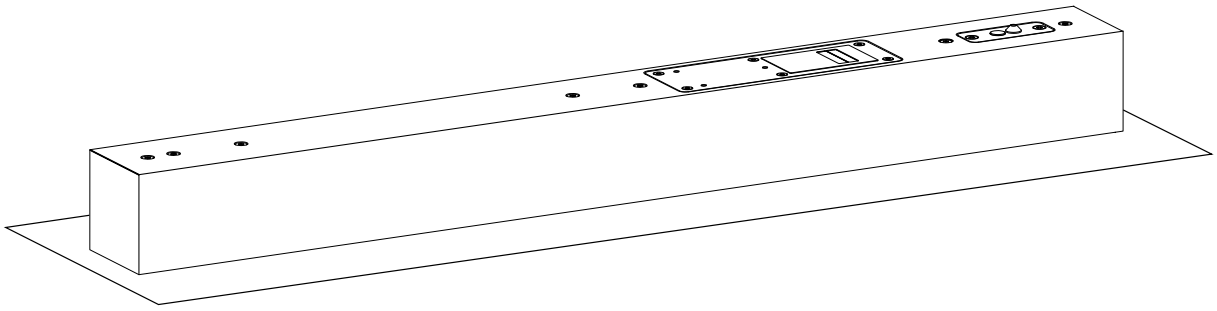

Procedure

1. Drill holes in the wall for the anchors and for the cable exit(s).
   Use the provided drilling template.

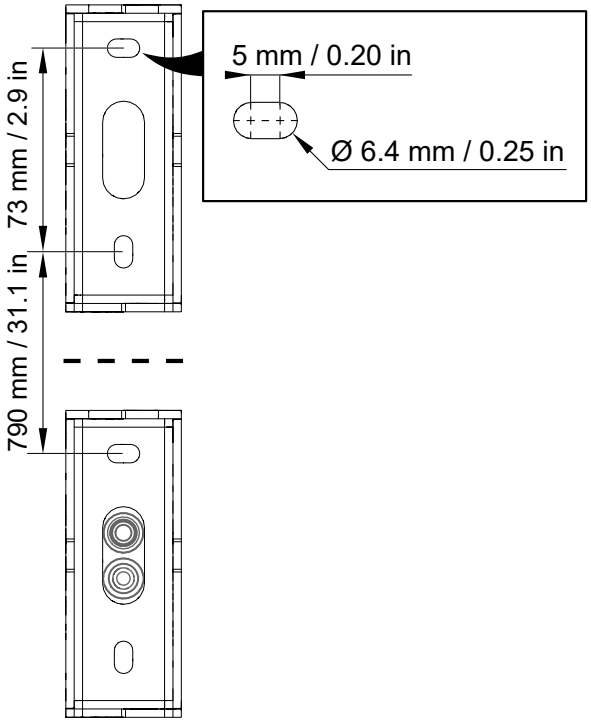

2. Run the speaker cable inside the wall.

3. Secure the two PANx2 wall-mounting parts to the wall.

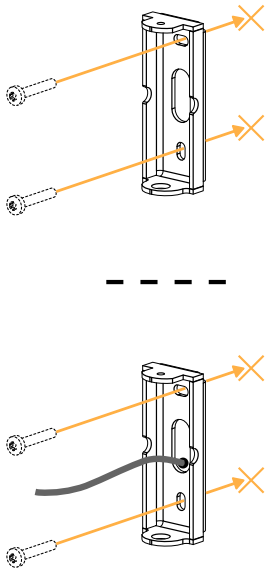

4. Secure the bottom PANx2 part to Soka:

a) Remove the connector sealing plate (if present) or the placeholder screws.
b) Run the cable through the PANx2 part and through the connector sealing plate.
c) Connect the speaker cable to the Soka terminal block. Refer to Cabling Soka (p.80).
d) Secure the PANx2 part and the connector sealing plate to Soka.

Use two M6×20 Torx screws.

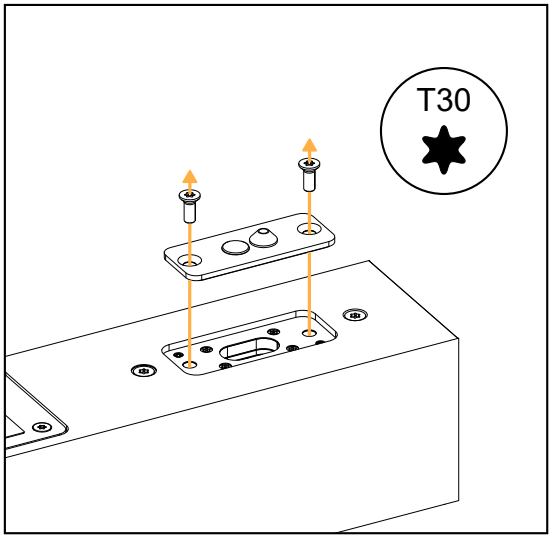

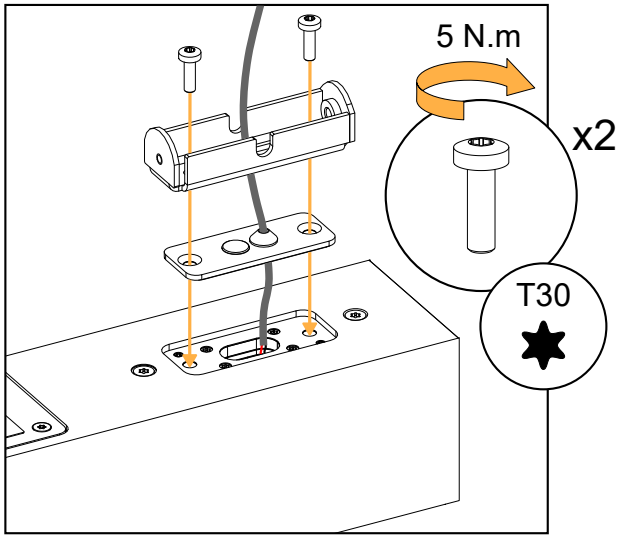

5. Secure the top PANx2 part to Soka:

a) Remove the two bottom placeholder screws.

b) Secure the PANx2 part to Soka.

Use two M6×20 Torx screws.

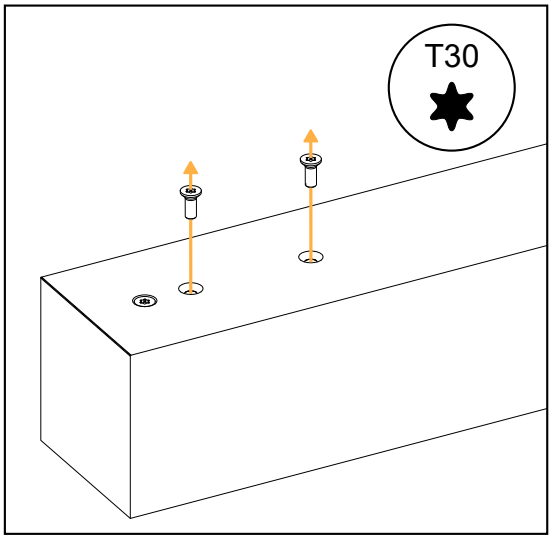

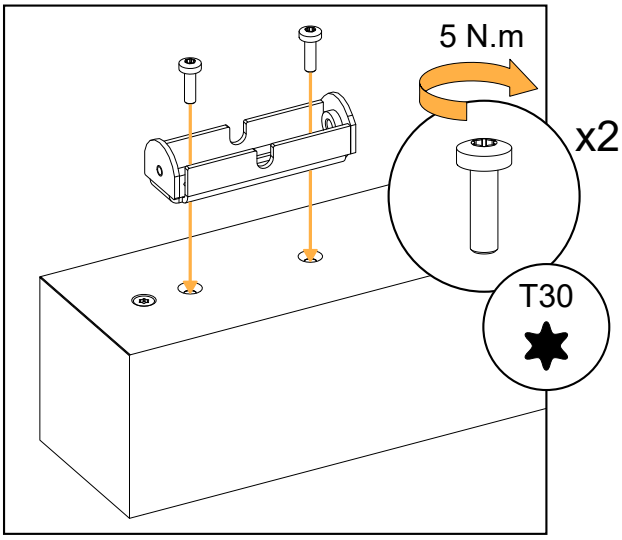

6. Mount the assembly on the wall-mounting parts:

a) Align the pins with the top holes and push the assembly downwards.

b) Drive the two M8×16 Torx screws from underneath the PANx2 parts.

Do not fully tighten the screws.

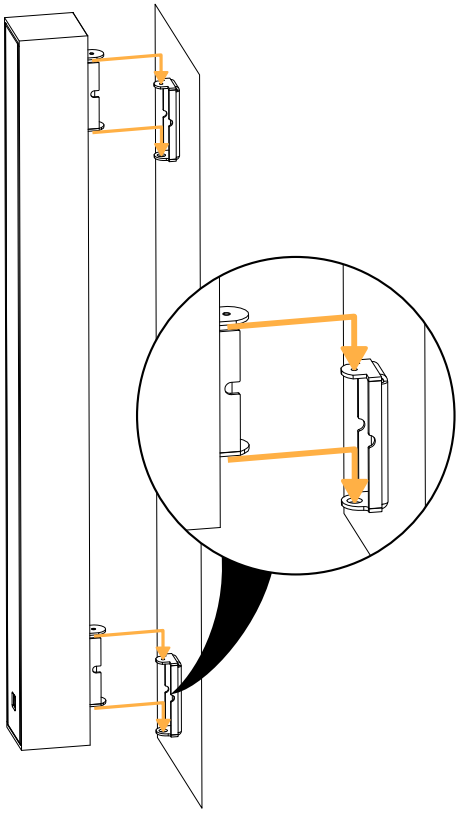

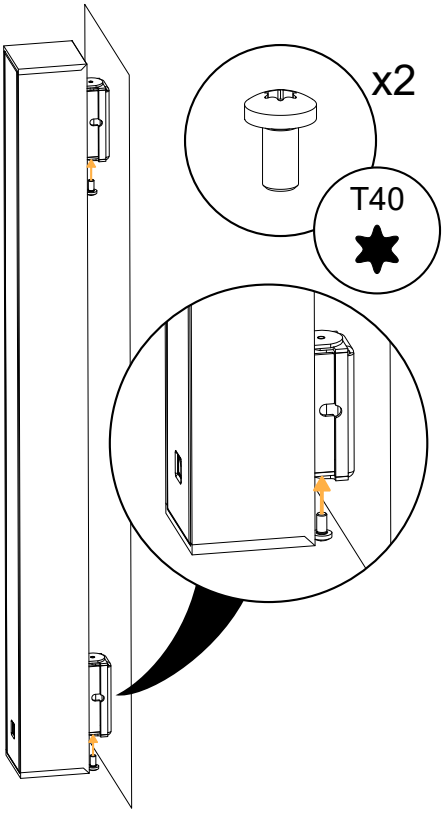

7. Rotate Soka to adjust the azimuth angle from -45° to +45°.

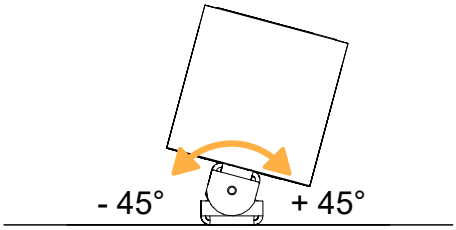

8. Tighten the two M8×16 Torx screws. Apply a torque of 10 N.m.
Make sure the assembly is stable.

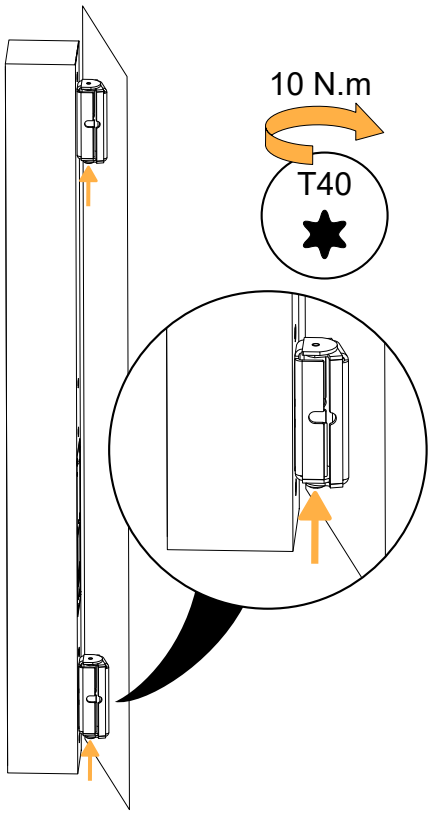

Wall-mounting Soka with TILT5

Type of deployment	wall-mounting
Rigging accessories	TILT-SUPPORT
	TILT5
Additional material	3 compatible screws and anchors
Tools	torque screwdriver
	screwdriver extension or angled screwdriver
	T30 Torx bit
	8 mm wrench or 8 mm hex socket
Min. number of operators	1

Secondary safety for flown enclosures

Use one insert at the back of the enclosure to implement a secondary safety.

Risk of crushing injury

Ensure that the wall or ceiling can support the load of the product.

It is recommended to mount only on solid structures. If mounting on a hollow structure (such as a wall cavity), place anchoring points on the framework (wall studs, ceiling joists), or reinforce the mounting area.

Select screws and anchors applicable to the wall or ceiling properties and to the load of the product. Prevent screws from loosening over time, using for example thread locker or lock washers.

Specifications for screws and anchors

deployment	accessory	ultimate tensile load per screw (daN)	ultimate shear load per screw (daN)	screws quantity	mounting hole size	specific constraints
wall-mounting	TILT-SUPPORT + any accessory	5	8	3	∅ 6.4 mm / 0.25 in (slotted)	–

Risk of falling objects

Do not use TILT, TILT5, TILT15, or TILT40 upside-down. These rigging accessories are designed for negative site angles only.

Screws and fasteners

from TILT-SUPPORT

×2

M5 hex locknut

from TILT5

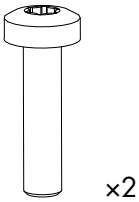

×2

M6×25 Torx

×2

M5 tapered spacer

Assembly

Prerequisite

Place Soka on its front face on a clean flat surface.

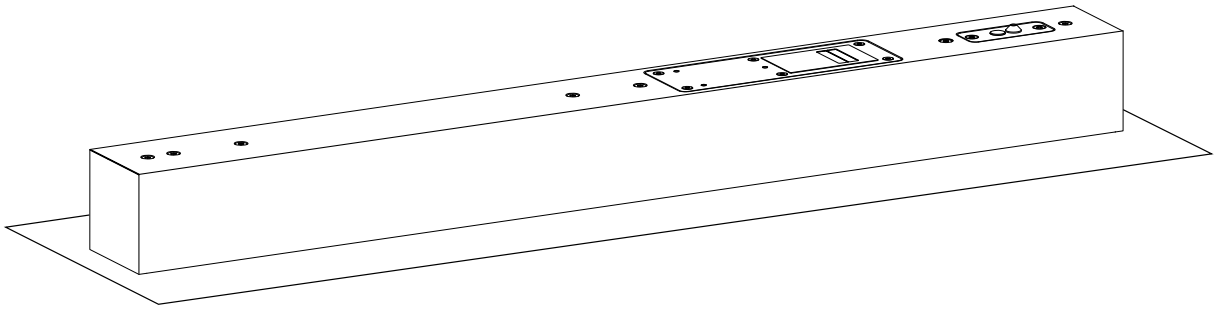

Make sure that the TILT5 safety screw is loosened.

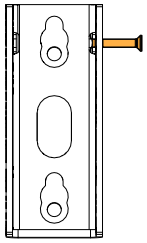

Procedure

1. Drill holes in the wall for TILT-SUPPORT and the cable exit(s).

   Make sure to leave enough space between the walls and the sides of the rigging element to access the safety screw(s) when the enclosure is mounted.

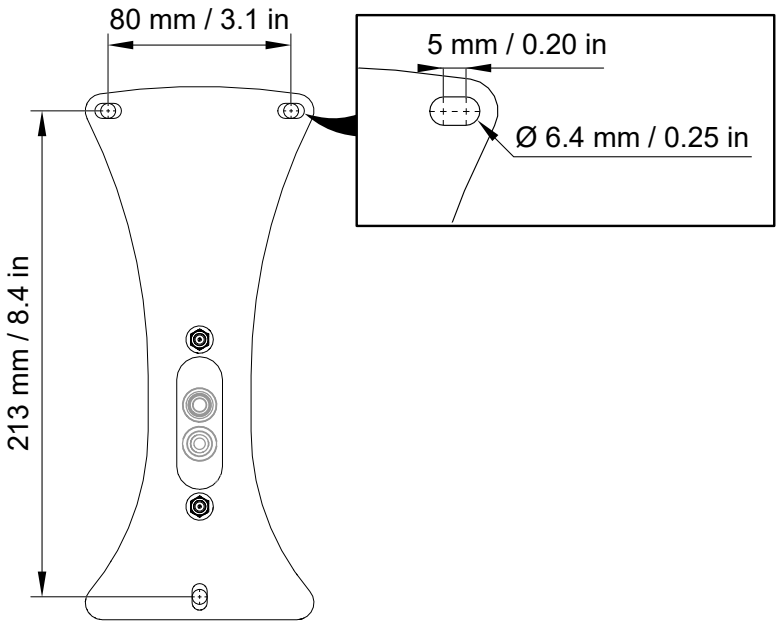

2. Run the speaker cable inside the wall.

3. Assemble the wall-mounting plate and tapered spacers with TILT-SUPPORT.

Use the two M5 nuts.

The wall-mounting plate gasket is facing away from the wall.

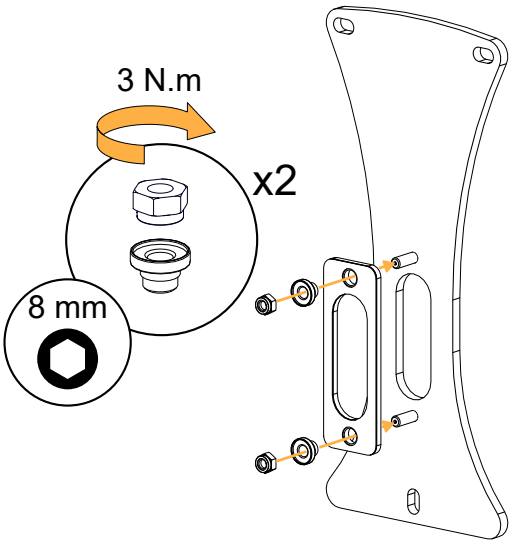

4. Secure TILT-SUPPORT and the wall-mounting plate to the wall.

Run the speaker cable through the assembly.

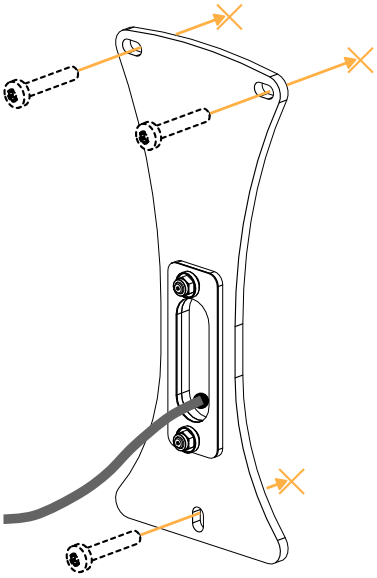

5. Secure TILT5 to Soka.

a) Remove the connector sealing plate (if present) or the placeholder screws.
b) Run the cable through TILT5 and through the connector sealing plate.
c) Connect the speaker cable to the Soka terminal block. Refer to Cabling Soka (p.80).
d) Secure TILT5 and the connector sealing plate to Soka.

Use two M6×25 Torx screws.

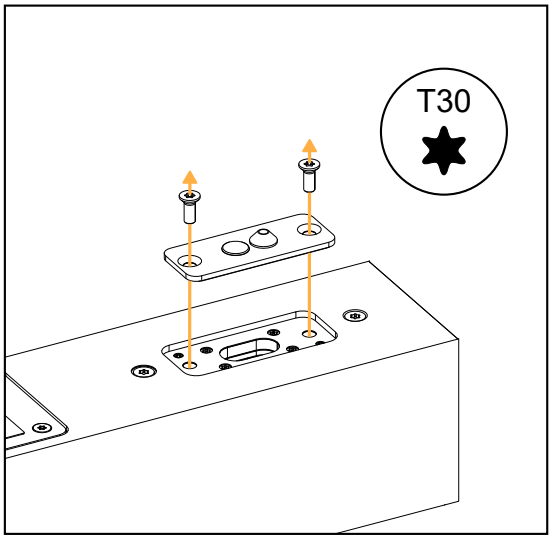

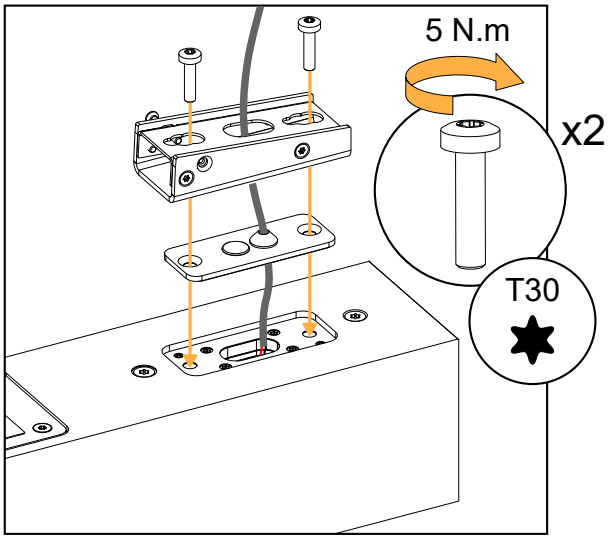

6. Mount Soka on the wall-mounting plate:

a) Align the midpoints of the TILT5 rear cutouts with the tapered spacers.
b) Push the assembly downwards.

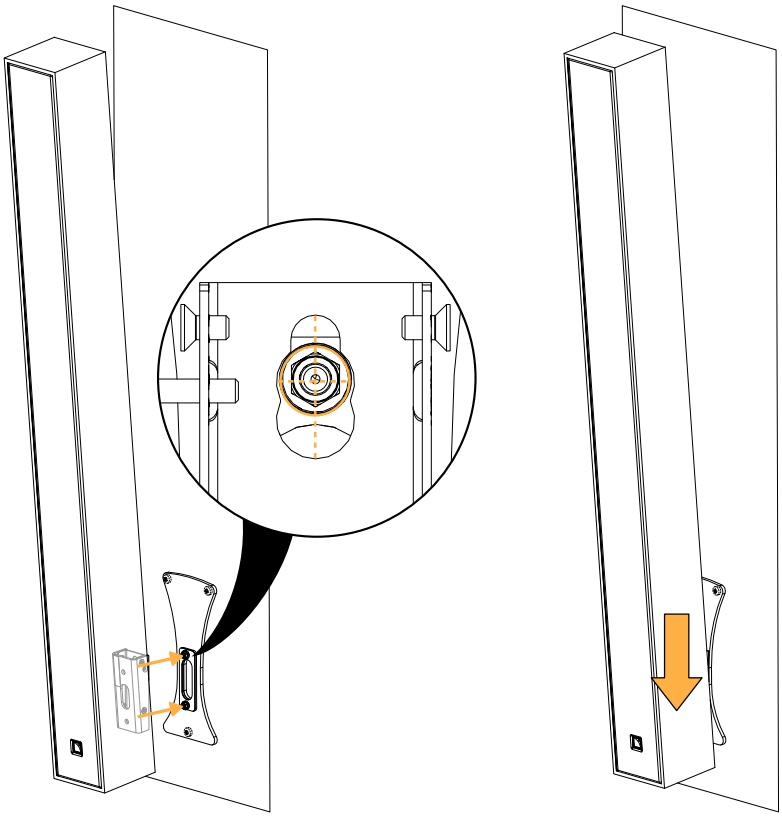

7. Tighten the safety screw and make sure the assembly is stable.

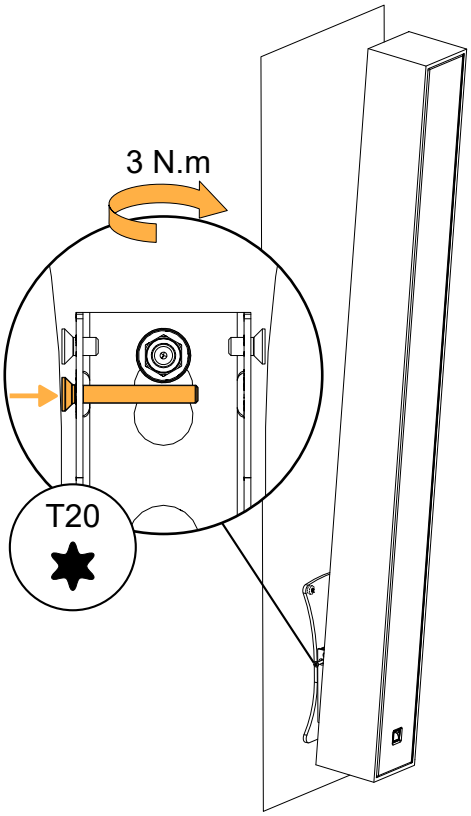

Wall-mounting Soka with PAN and TILT5

Type of deployment	wall-mounting
Rigging accessories	TILT-SUPPORT
	PAN
	TILT5
Additional material	3 compatible screws and anchors
Tools	torque screwdriver
	T25 Torx bit
	T30 Torx bit
	T40 Torx bit
	8 mm wrench or 8 mm hex socket
Min. number of operators	1

Assembly overview

Pay attention to the position of the accessory parts throughout the procedure.

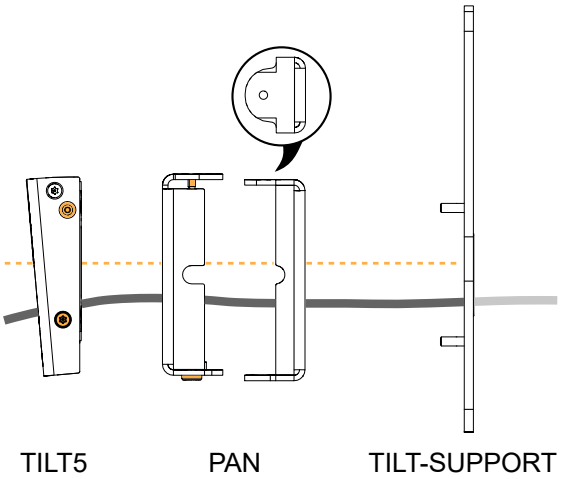

Secondary safety for flown enclosures

Use one insert at the back of the enclosure to implement a secondary safety.

Risk of crushing injury

Ensure that the wall or ceiling can support the load of the product.

It is recommended to mount only on solid structures. If mounting on a hollow structure (such as a wall cavity), place anchoring points on the framework (wall studs, ceiling joists), or reinforce the mounting area.

Select screws and anchors applicable to the wall or ceiling properties and to the load of the product. Prevent screws from loosening over time, using for example thread locker or lock washers.

Specifications for screws and anchors

deployment	accessory	ultimate tensile load per screw (daN)	ultimate shear load per screw (daN)	screws quantity	mounting hole size	specific constraints
wall-mounting	TILT-SUPPORT + any accessory	5	8	3	∅ 6.4 mm / 0.25 in (slotted)	–

Risk of falling objects

Do not use PAN or PANx2 upside-down.

Do not swap the wall-mounting part(s) and the enclosure-mounting part(s).

Risk of falling objects

Do not use TILT, TILT5, TILT15, or TILT40 upside-down. These rigging accessories are designed for negative site angles only.

Screws and fasteners

from TILT-SUPPORT

×2

M5 hex locknut

×2

thick plain washer
Ø 5 mm

from PAN

×2

M5×20 Torx

×2

M5 hex locknut

×2

thick plain washer
Ø 5 mm

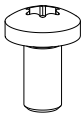

×2

M8×16 Torx

from TILT5

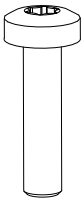

×2

M6×25 Torx

×2

M5 tapered spacer

Assembly

Prerequisite

Place Soka on its front face on a clean flat surface.

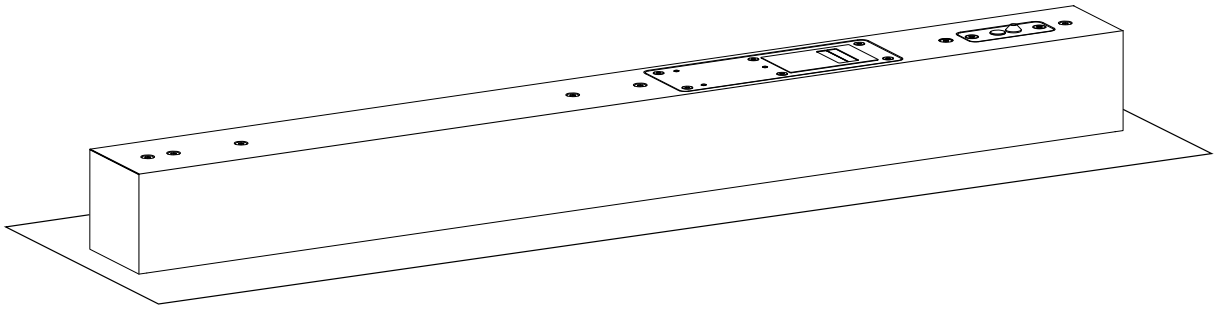

Make sure that the TILT5 safety screw is loosened.

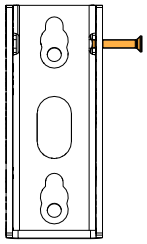

Procedure

1. Drill holes in the wall for TILT-SUPPORT and the cable exit(s).

   Make sure to leave enough space between the walls and the sides of the rigging element to access the safety screw(s) when the enclosure is mounted.

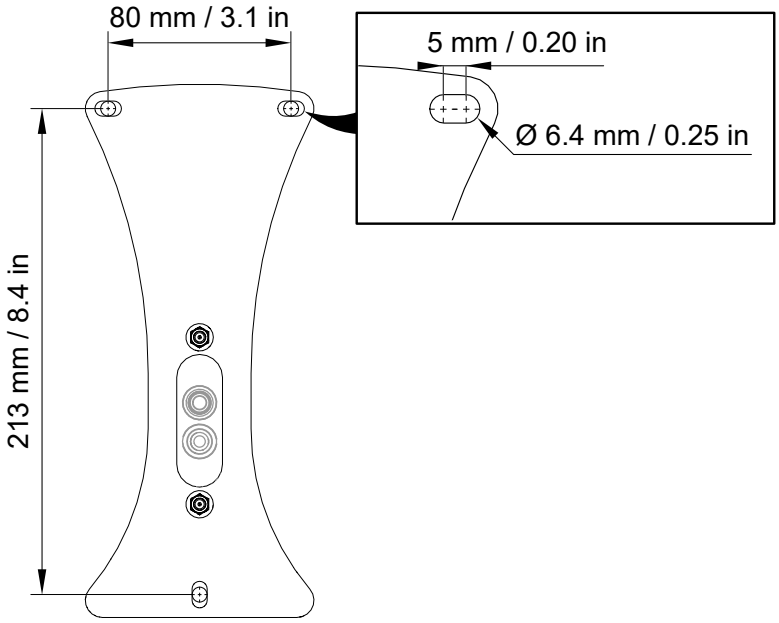

2. Run the speaker cable inside the wall.

3. Assemble the PAN wall-mounting part with TILT-SUPPORT.

Use the two M5 nuts and washers.

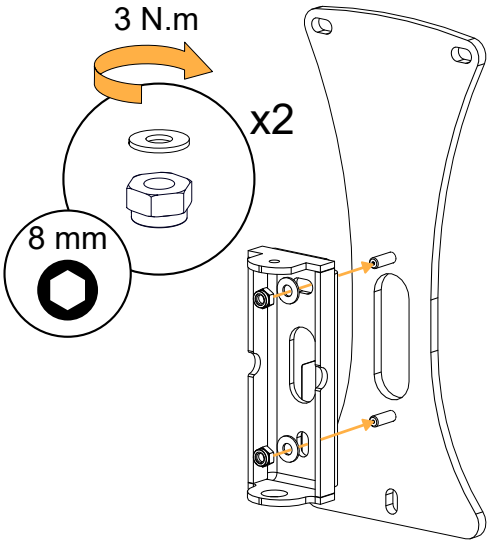

4. Secure TILT-SUPPORT and PAN to the wall.

Run the speaker cable through the assembly.

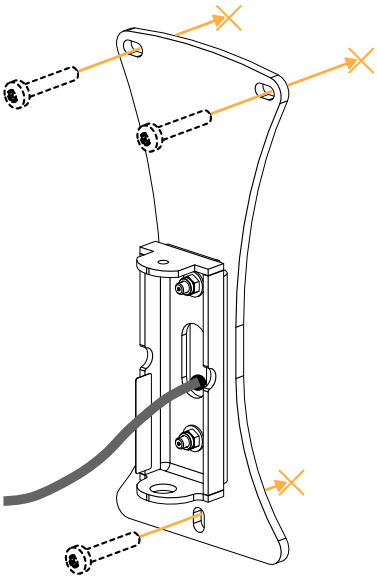

5. Assemble the wall-mounting plate and tapered spacers with PAN.

Use two M5×20 Torx screws, two M5 washers, and two M5 nuts.

The wall-mounting plate gasket is facing away from PAN.

Run the speaker cable through the assembly.

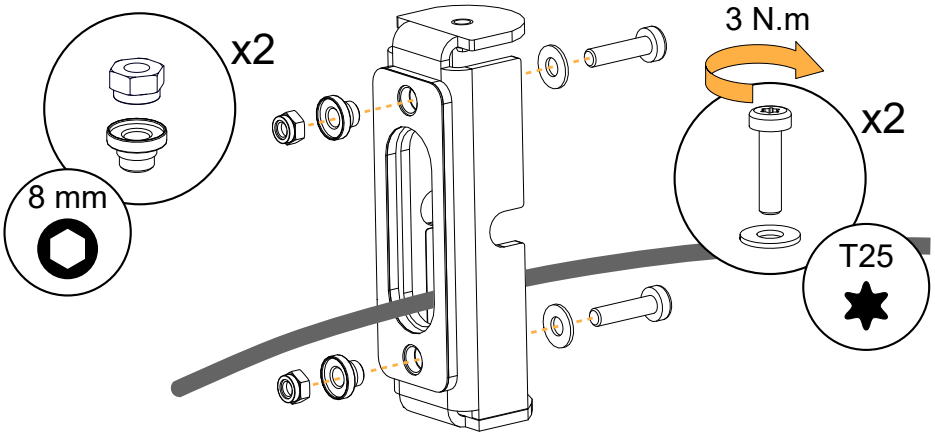

6. Secure TILT5 to Soka.

a) Remove the connector sealing plate (if present) or the placeholder screws.
b) Run the cable through TILT5 and through the connector sealing plate.
c) Connect the speaker cable to the Soka terminal block. Refer to Cabling Soka (p.80).
d) Secure TILT5 and the connector sealing plate to Soka.

Use two M6×25 Torx screws.

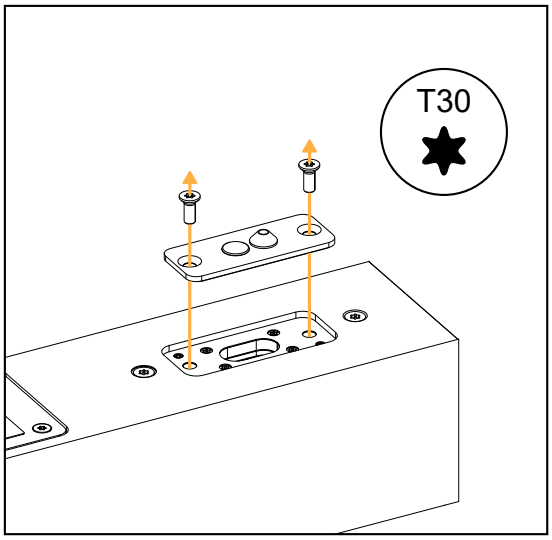

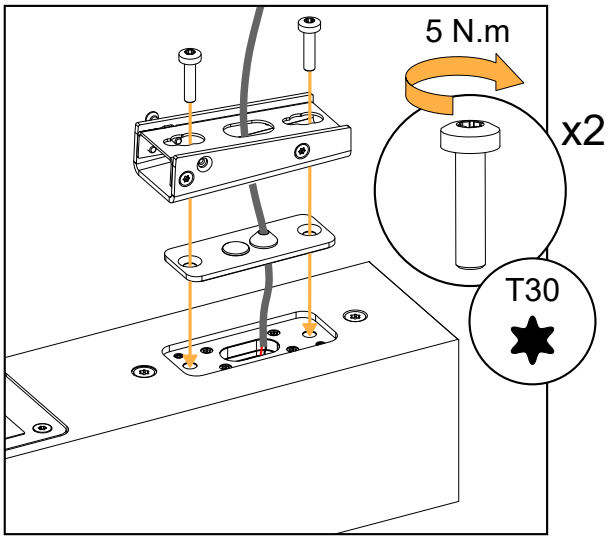

7. Mount PAN on TILT5:

a) Align the tapered spacers with the midpoints of the TILT5 rear cutouts.

b) Push PAN towards the top of TILT5.

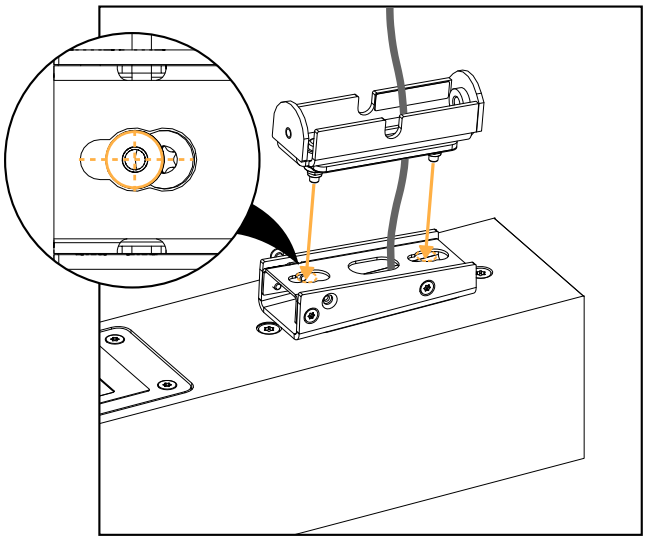

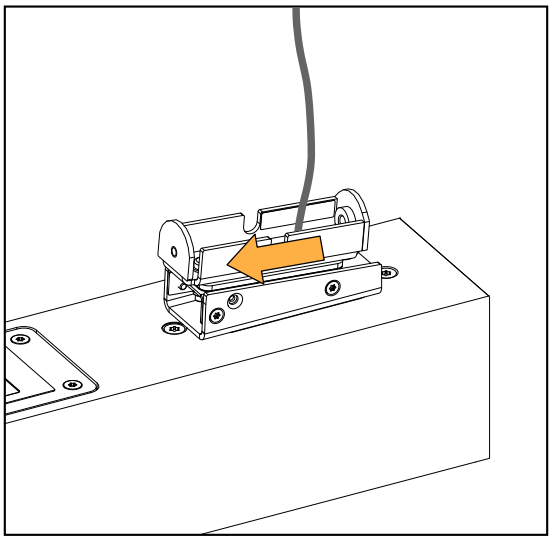

8. Tighten the safety screw on TILT5.

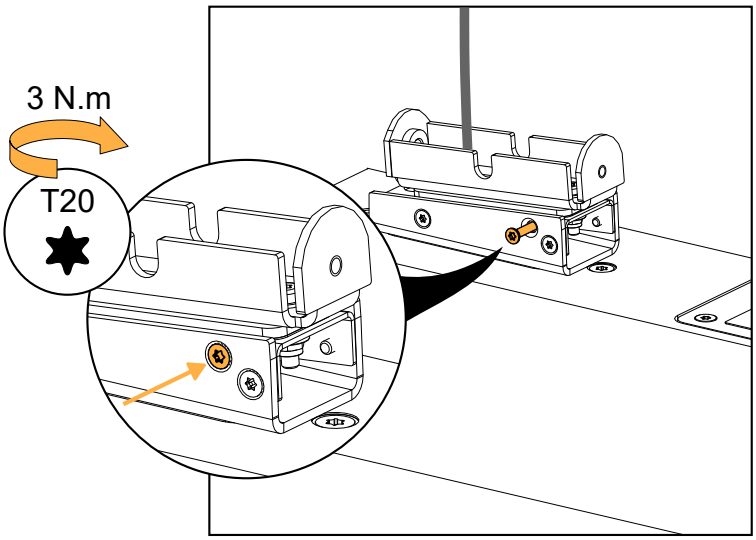

9. Mount Soka on the PAN wall-mounting part:

a) Align the pin with the top hole and push the assembly downwards.

b) Drive the M8×16 Torx screw from underneath PAN.

Do not fully tighten the screws.

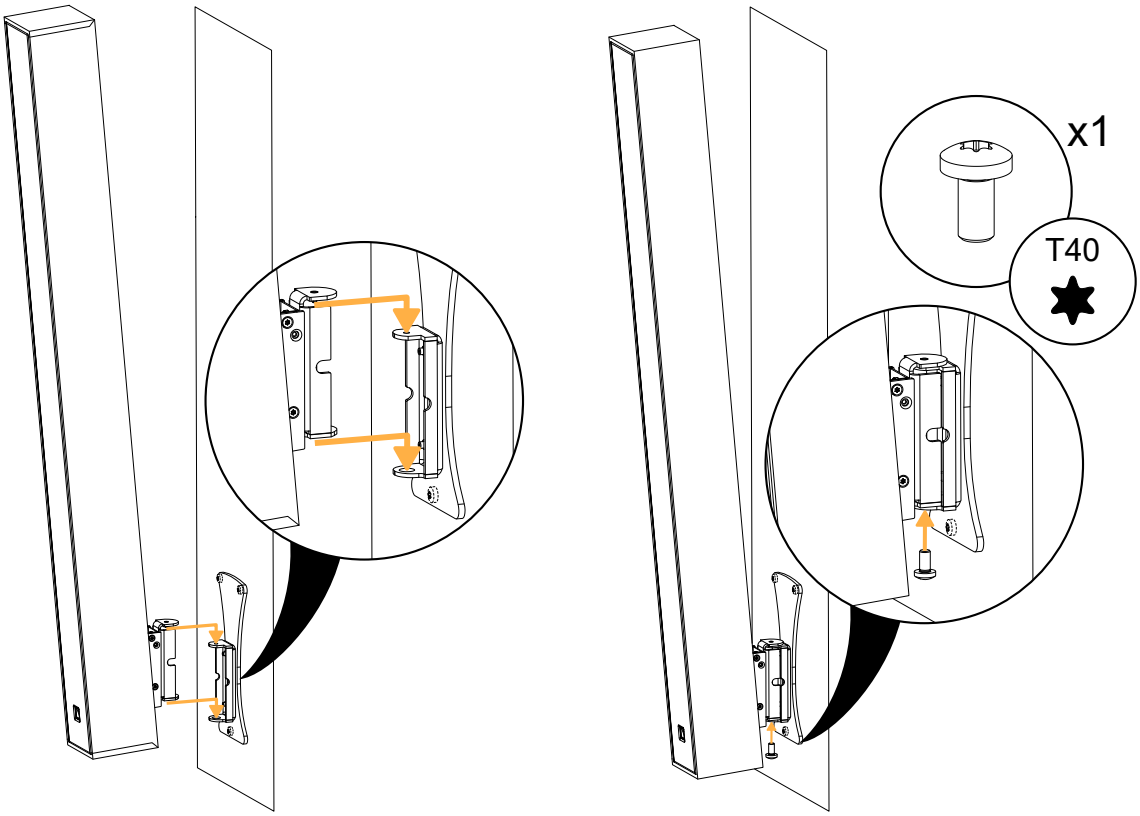

10. Rotate the assembly to adjust the azimuth angle from -45° to +45°.

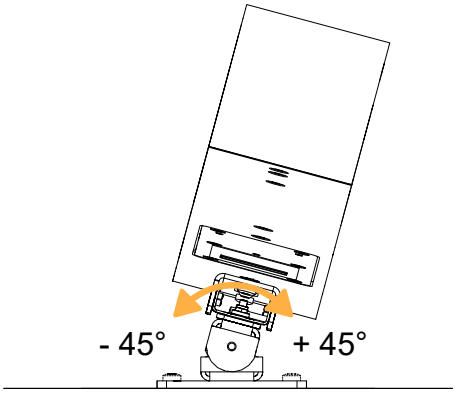

11. Tighten the M8×16 Torx screw. Apply a torque of 10 N.m.
Make sure the assembly is stable.

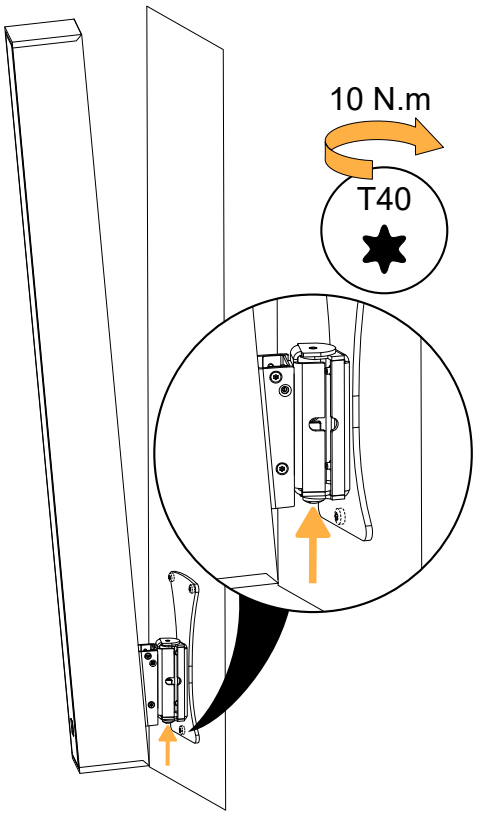

Ceiling-mounting or flying Soka with VBAR

Type of deployment	ceiling-mounting or truss-mounting
Rigging accessories	VBAR
Additional material	2 compatible screws and anchors, or
	1 max. Ø10 mm / 0.39 in truss clamp, or
	1 max. Ø10 mm / 0.39 in threaded rod, with corresponding nuts and washers
Tools	torque screwdriver
	T30 Torx bit
Min. number of operators	2

Secondary safety for flown enclosures

Use one insert at the back of the enclosure to implement a secondary safety.

Risk of crushing injury

Ensure that the wall or ceiling can support the load of the product.

It is recommended to mount only on solid structures. If mounting on a hollow structure (such as a wall cavity), place anchoring points on the framework (wall studs, ceiling joists), or reinforce the mounting area.

Select screws and anchors applicable to the wall or ceiling properties and to the load of the product. Prevent screws from loosening over time, using for example thread locker or lock washers.

Specifications for screws and anchors

deployment	accessory	ultimate tensile load per screw (daN)	ultimate shear load per screw (daN)	screws quantity	mounting hole size	specific constraints
ceiling-mounting	VBAR	12	–	2	Ø 10.4 mm / 0.41 in	use the holes 1 and 7 (at both ends)

Screws and fasteners

from VBAR

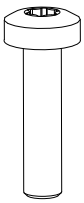

×2

M6×25 Torx

Ceiling-mounting Soka with VBAR

About this task

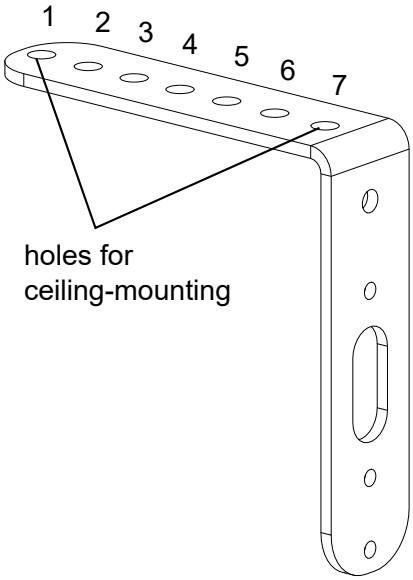

For this configuration, the speaker cable must be run inside the ceiling.

Prerequisite

Place Soka on its front face on a clean flat surface.

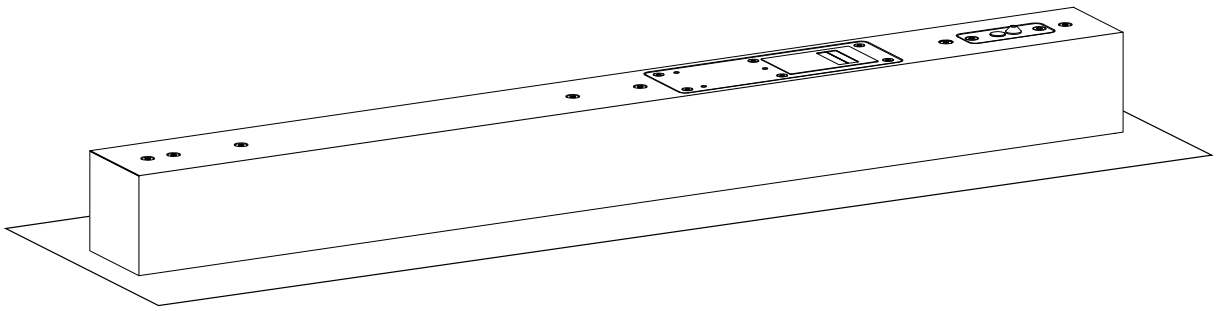

Procedure

Ceiling-mounting holes
When ceiling-mounting with VBAR, always use holes 1 and 7 (at both ends) to ensure optimal support.

1. Drill holes in the ceiling for VBAR.

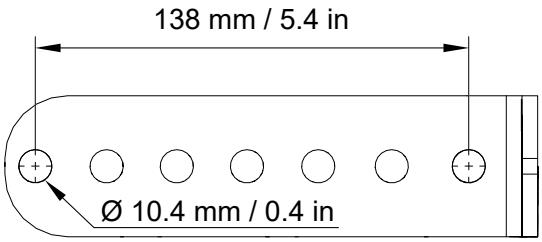

2. Secure VBAR to the ceiling.

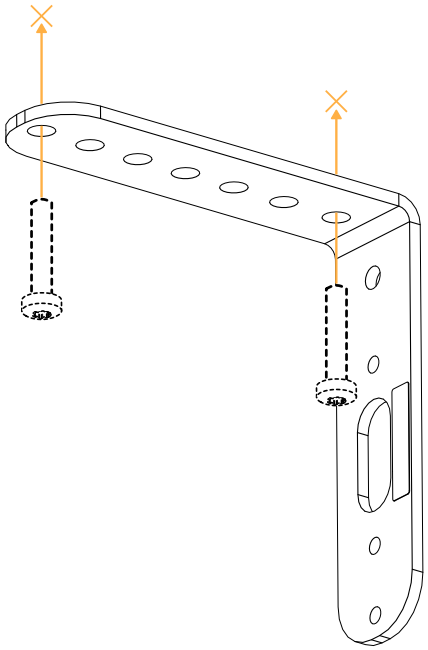

3. Run the speaker cable through VBAR.

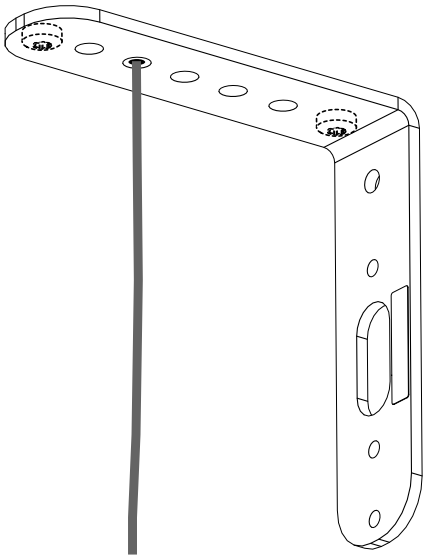

4. Remove the two top placeholder screws.

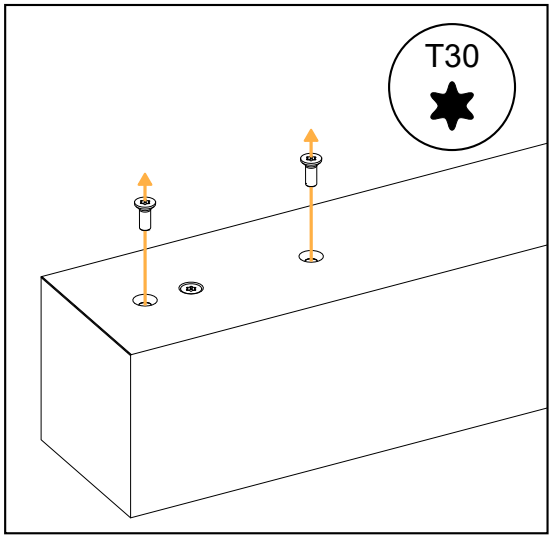

Risk of crushing injury
This step requires two operators.

Risk of damaging the cable
Make sure not to pinch the speaker cable.

5. Secure Soka to VBAR.

Use two M6×25 Torx screws.

Make sure the assembly is stable.

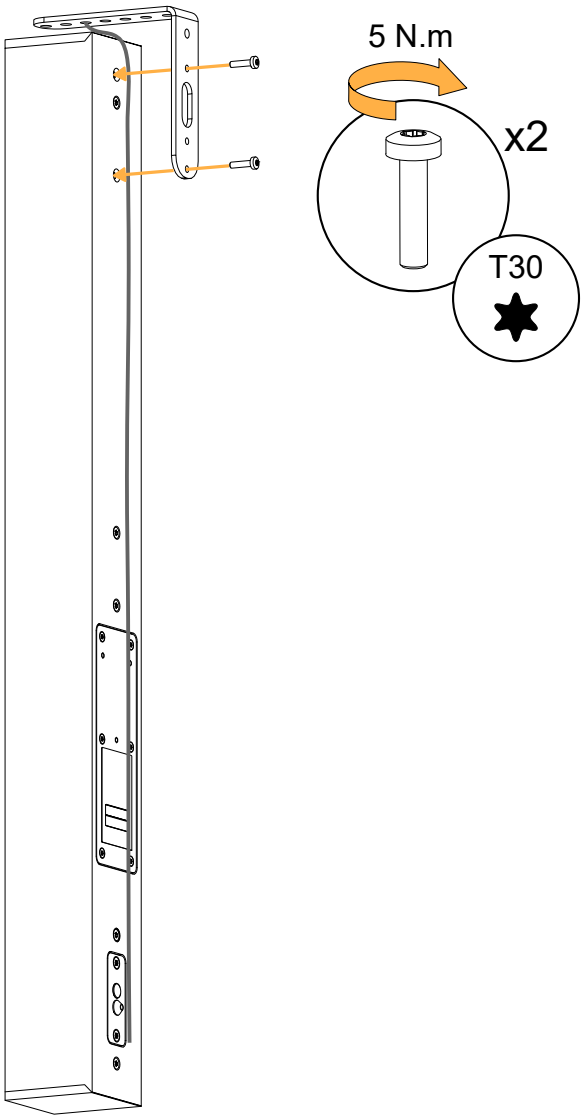

6. Prepare Soka cabling. Refer to Cabling Soka (p.80).

Flying Soka with VBAR

About this task

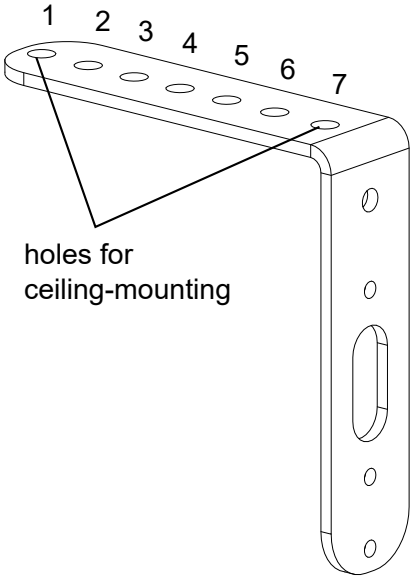

Soka site angles when flown or truss-mounted with VBAR

hole N°	angle
1	11°
2	9°
3	6°
4	4°
5	2°
6	-1°
7	-4°

Prerequisite

Place Soka on its front face on a clean flat surface.

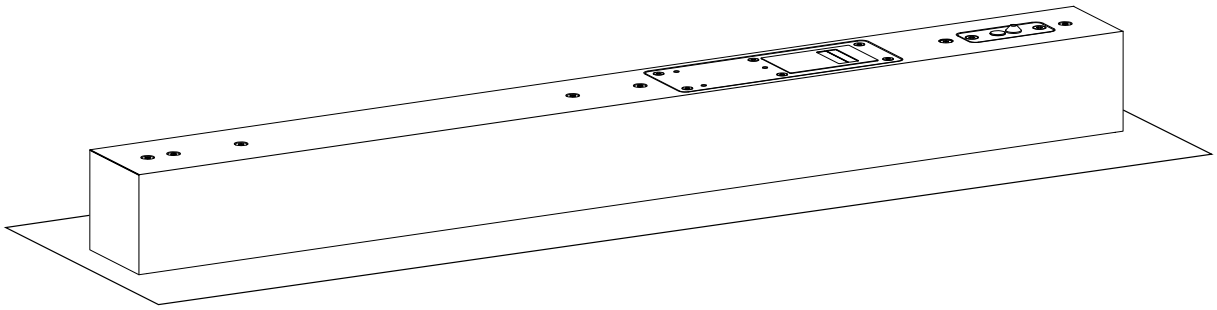

Procedure

1. Secure VBAR to the ceiling.

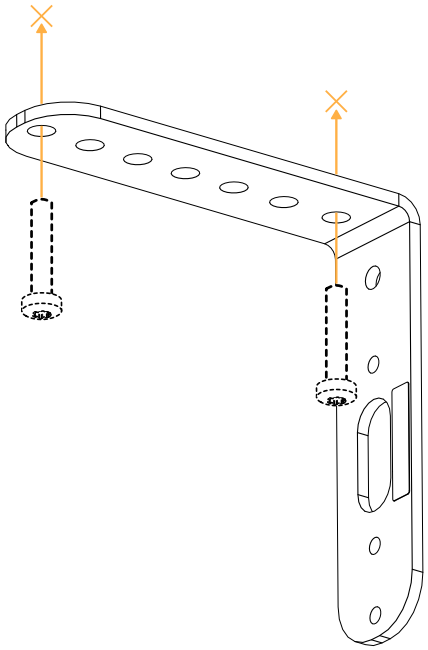

2. Run the speaker cable through VBAR.

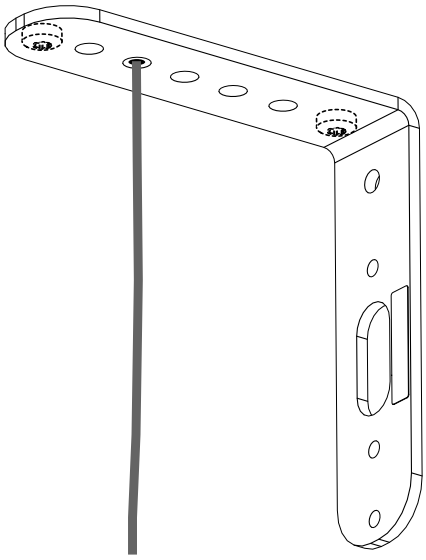

3. Remove the two top placeholder screws.

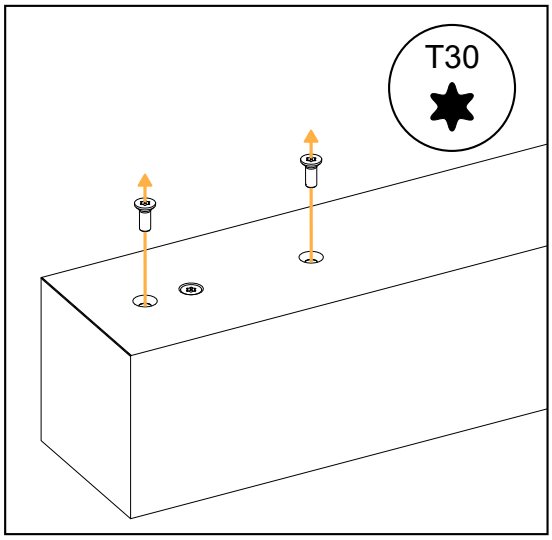

Risk of damaging the cable
Make sure not to pinch the speaker cable.

4. Secure Soka to VBAR.

Use two M6×25 Torx screws.

Make sure the assembly is stable.

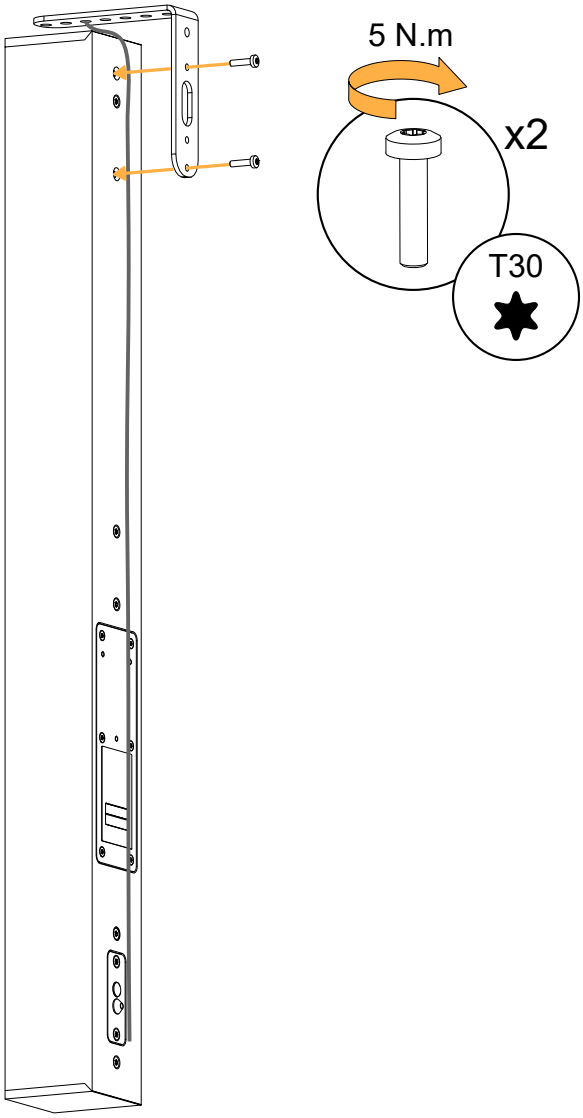

5. Prepare Soka cabling. Refer to Cabling Soka (p.80).
6. Choose the pickup point and fly Soka with a truss clamp or a threaded rod (maximum Ø10 mm / 0.39 in).

   Make sure the assembly is stable.

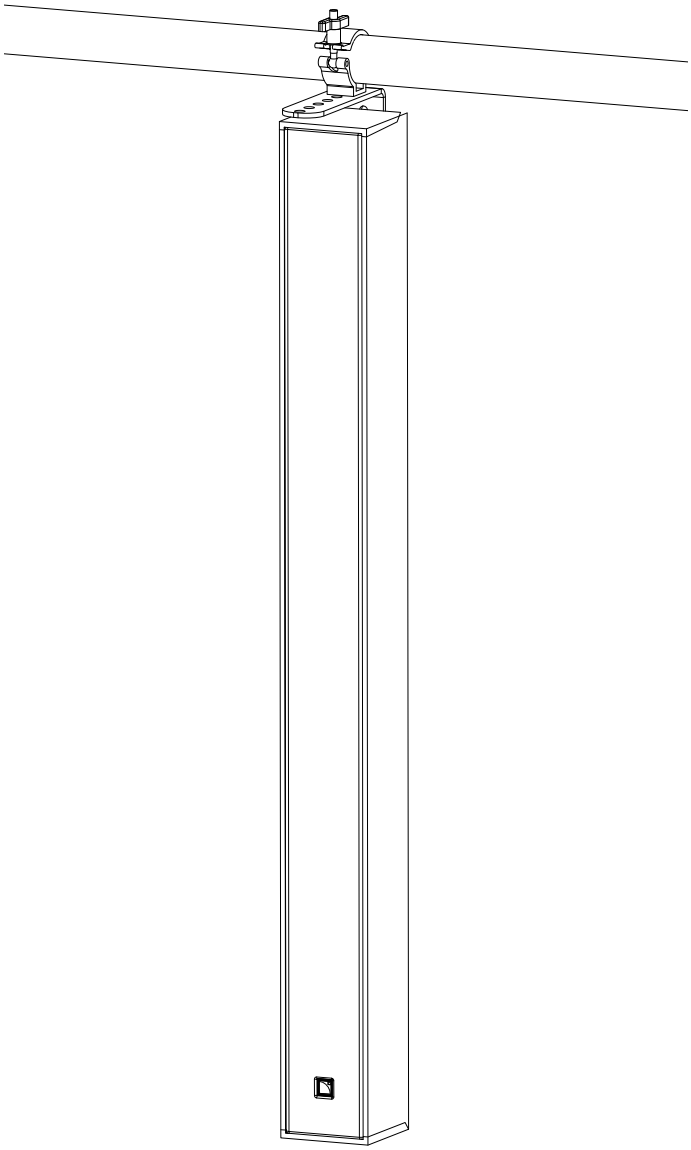

Pole-mounting Soka with POLE

Type of deployment	pole-mounting
Rigging accessories	POLE
Additional material	Ø 35 mm (1-3/8") pole
Tools	torque screwdriver
	screwdriver extension
	T30 Torx bit
	17 mm wrench
Min. number of operators	1

Assembly

Prerequisite

Place Soka on its front face on a clean flat surface.

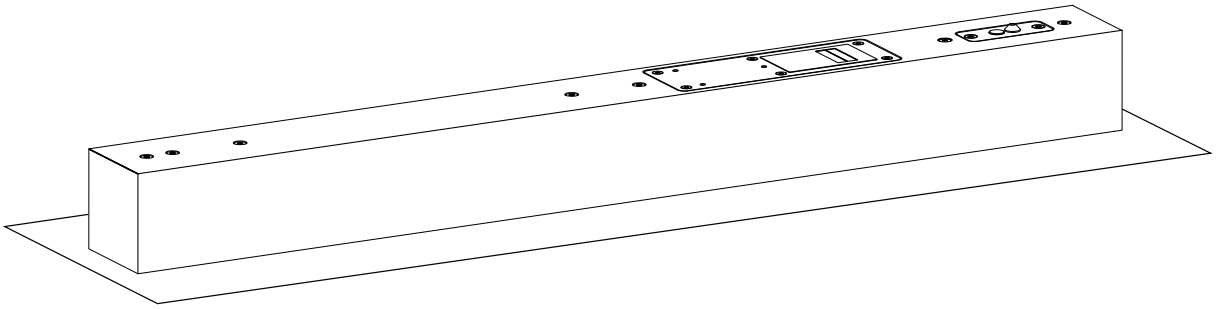

Procedure

1. Remove the two placeholder screws in the middle or at the top of Soka.

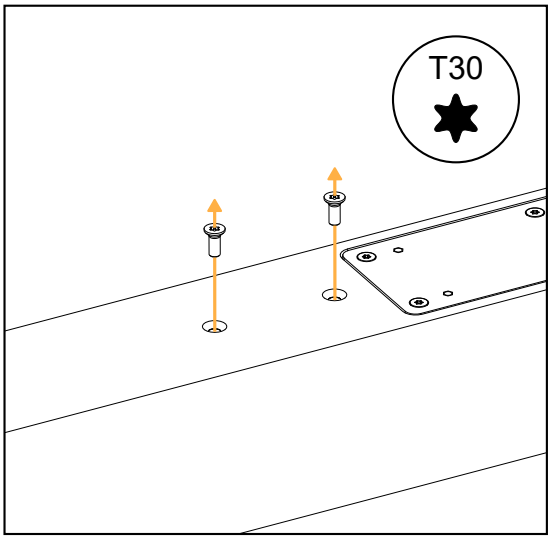

2. Secure POLE to Soka with the two captive screws.

Use a screwdriver extension.

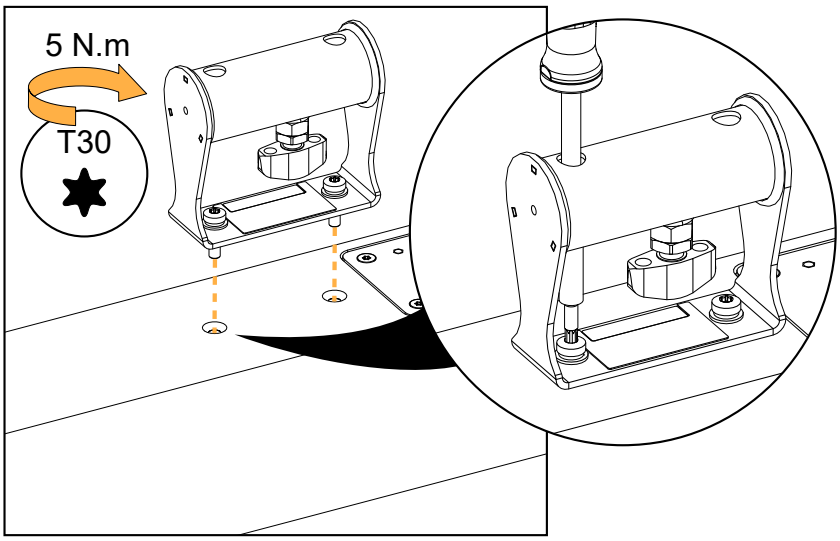

3. Mount the assembly on a Ø 35 mm (1-3/8") pole.

4. Tighten the locking knob and the nut.

Make sure the assembly is stable.

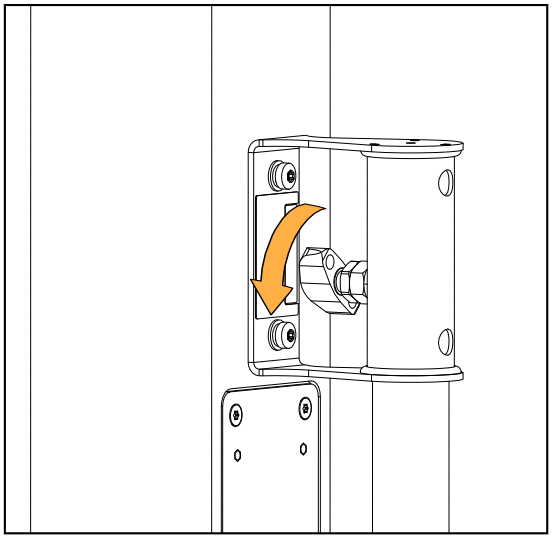

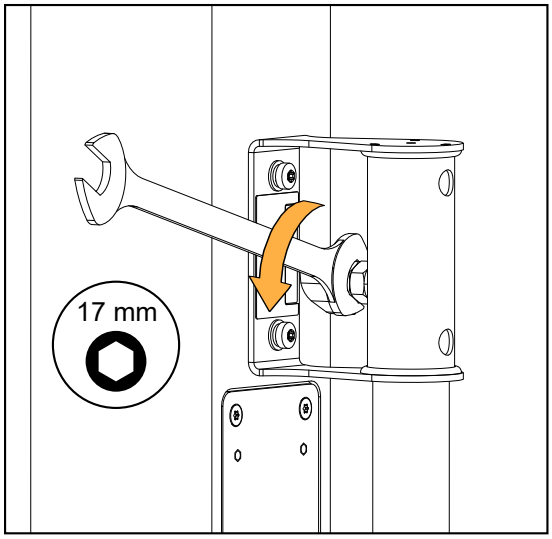

Connection to LA amplified controllers

Refer to the **Amplification reference** technical bulletin for the latest information on compatibility with amplified controllers and cabling schemes for all enclosure types.

Enclosure drive capacity per amplified controller

Make sure the total number of connected enclosures does not exceed the maximum number of enclosures per controller (refer to the footnotes).

	LA2Xi	**LA4X**	**LA7.16i**	**LA12X**
	per output */ total	**per output */ total**	**per output */ total**	**per output */ total**
Soka	1 / 4 (SE), 1 / 2 (BTL)	2 / 8	1 / 16	3 / 12

Reduced maximum SPL or drive capacity with LA2Xi: refer to the **LA2Xi owner's manual**.

* For passive loudspeakers, the value corresponds to the number of enclosures in parallel on the output. For active loudspeakers, the value corresponds to the number of sections in parallel on the output.

Cabling schemes for Soka

Refer to the cabling schemes to connect the enclosures to different types of output configurations.

Refer to the cable manufacturer documentation for the wire color code.

Refer to the **LA2Xi owner's manual** for more information on output configurations.

Terminal block output (LA2Xi SE / LA7.16i)

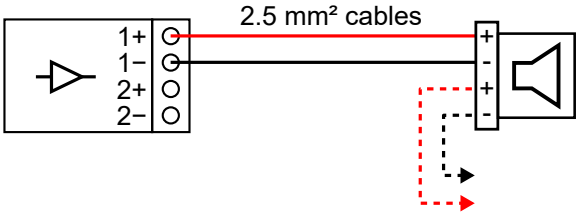

Terminal block output (LA2Xi BTL)

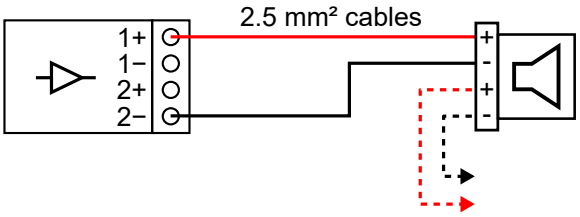

One-channel speakON output

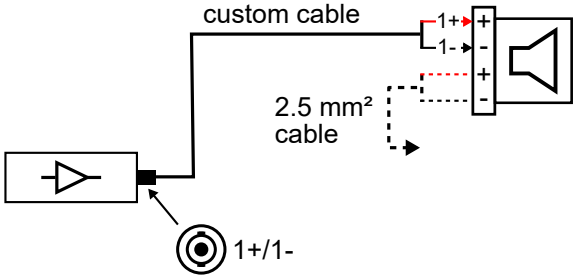

Two-channel speakON output

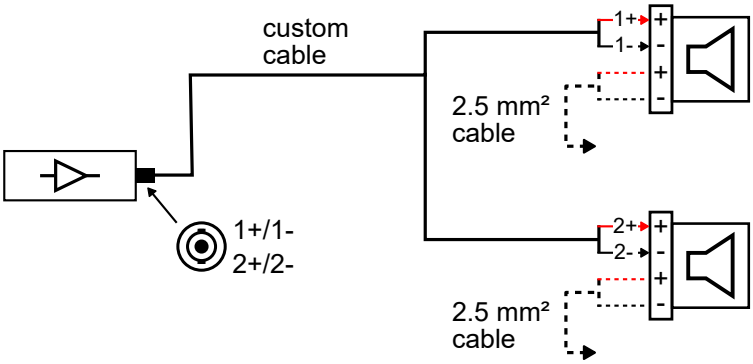

Cabling Soka

Accessory	connector sealing plate (provided)
Screws and fasteners	2 M6×16 screws (mounted on enclosure)
Tools	torque screwdriver
	T30 Torx bit
	small tool or flat screwdriver (3 mm or less)
Additional material	recommended: insulated cable ferrules and crimping tool
Min number of operators	1

Specifications for insulated cable ferrules

Wire range		14 AWG / 2.5 mm²	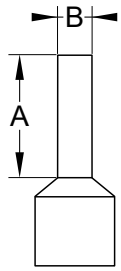
Maximum electric current		30 A	
Maximum electrical rating		105 °C (221 °F) / 600 V	
Terminal material		tin-plated copper	
Dimensions	A	12 mm / 0.47 in	
	B	2.5 mm / 0.10 in	

Cabling

Prerequisite

The cable glands on the connector sealing plate are compatible with cables up to 2 × 2.5 mm² gauge.

Refer to:

- APPENDIX B: Recommendation for speaker cables (p.109)
- Cabling schemes for Soka (p.79)

About this task

The connector sealing plate has two holes: one for the input cable and one for the cable connecting to the next enclosure in parallel. By default, the first hole is fitted with a cable gland and the second one with a protective plug. An extra cable gland is provided with each enclosure.

This procedure describes how to connect the input cable to the enclosure. If the enclosure must be connected in parallel, replace the protective plug with the extra cable gland and proceed identically for both cables.

Procedure

1. Remove the two screws from the enclosure.

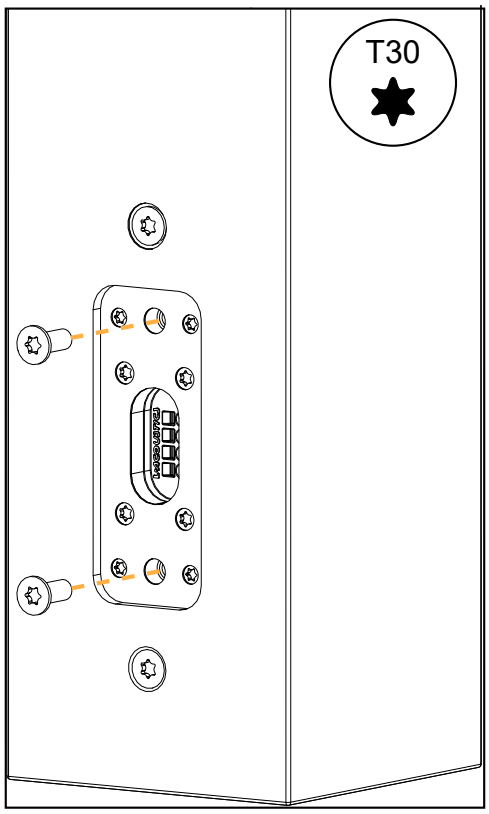

2. Insert the cable through the cable gland.

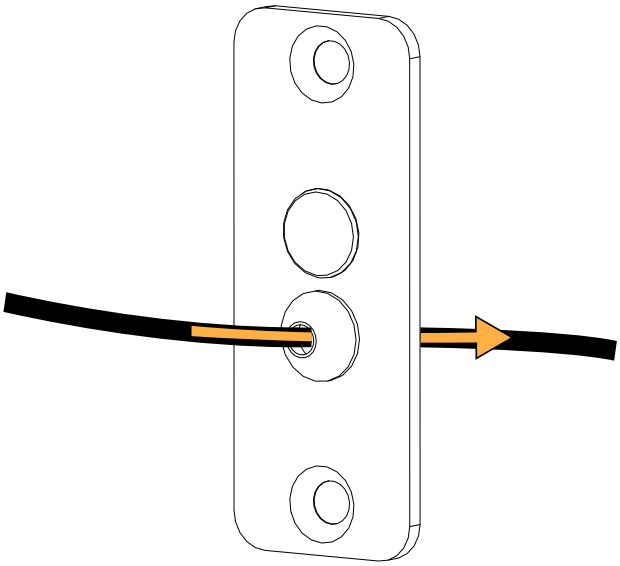

3. Strip the wires of the cable.

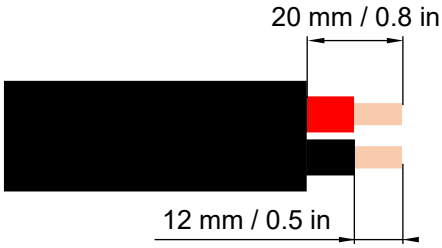

2 × max. 2.5 mm² cable

4. Optionnally, crimp insulated ferrules at the end of both wires.

Refer to the cable manufacturer documentation for the wire color code.

5. Push the wires into the terminals.

If necessary, use a small tool in the hole next to the terminal to unlock it.

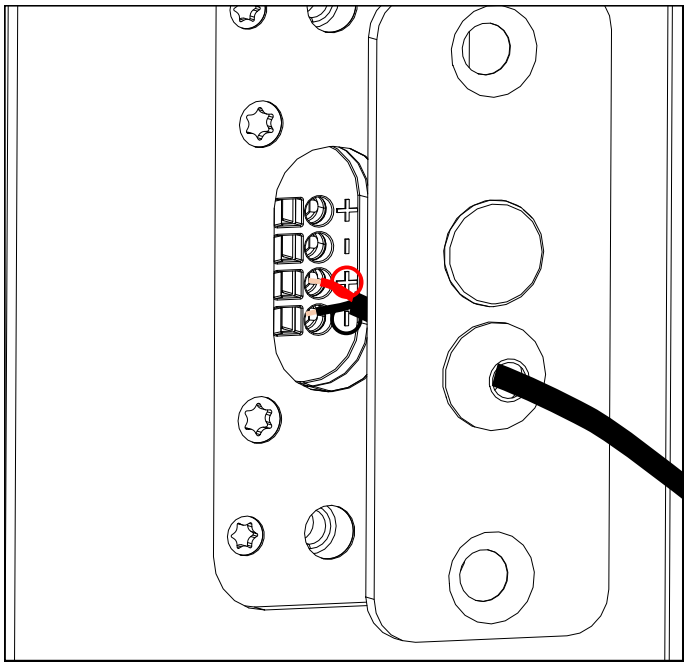

6. Secure the connector sealing plate to the enclosure.

Apply a torque of 3 N.m.

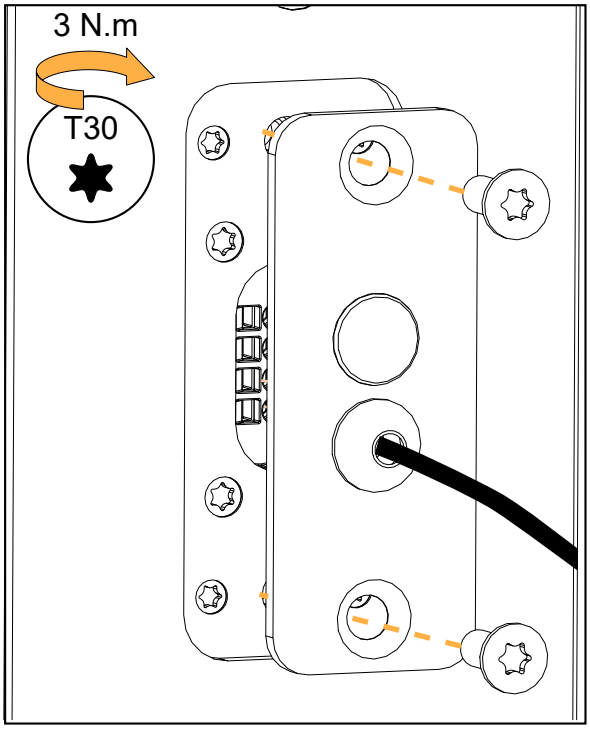

What to do next

To remove the cables, use the small tool to unlock the terminals and pull on the wires.

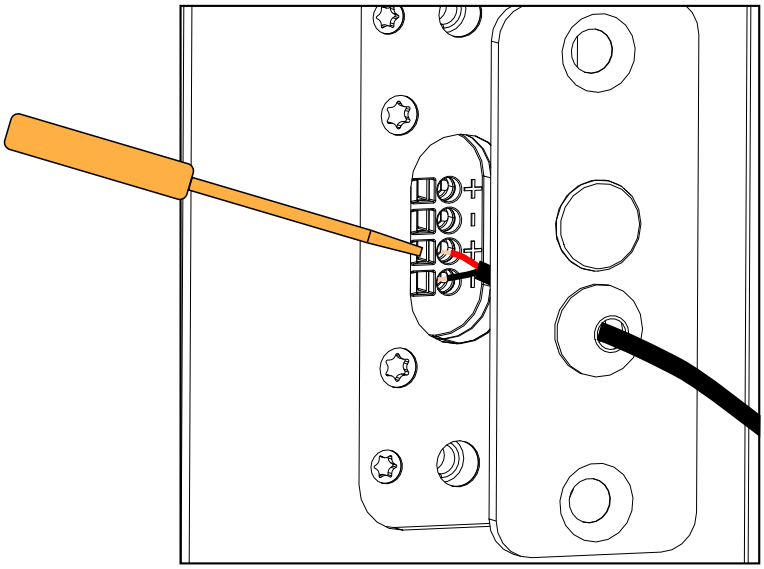

Cabling with SPCON

About this task

Risk of electric shock

When SPCON is connected to an amplified controller, the bare wires carry electrical voltage.
Always mount SPCON to the enclosure **before** connecting the speaker cable to SPCON.
Always disconnect the speaker cable from SPCON **before** removing SPCON from the enclosure.
If the speaker cable cannot be disconnected, unplug the amplified controller from the mains.

SPCON is only compatible with the following rigging accessories:

- VBAR
- POLE

Procedure

1. Remove the connector sealing plate (if present) or the placeholder screws.

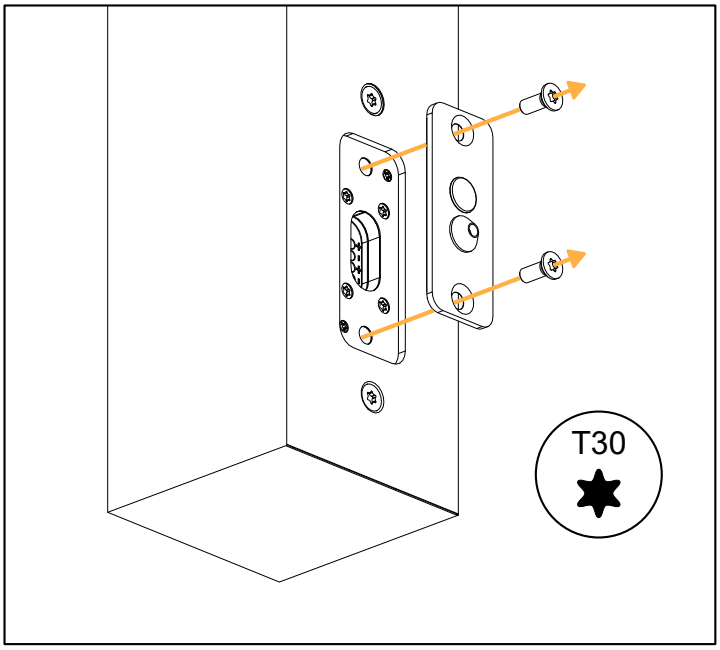

2. Push the SPCON ferrules into the terminals.

   If necessary, use a small tool in the hole next to the terminal to unlock it.

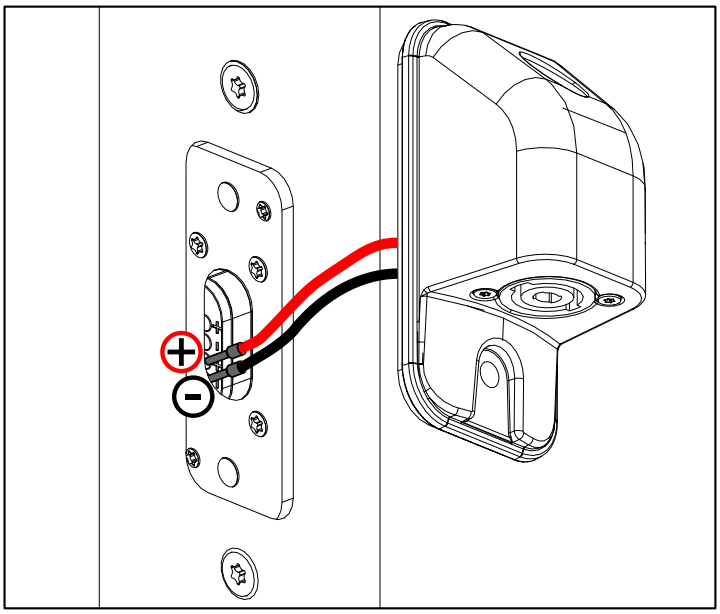

3. Secure SPCON to Soka.

Use the two provided M6×25 Torx screws.

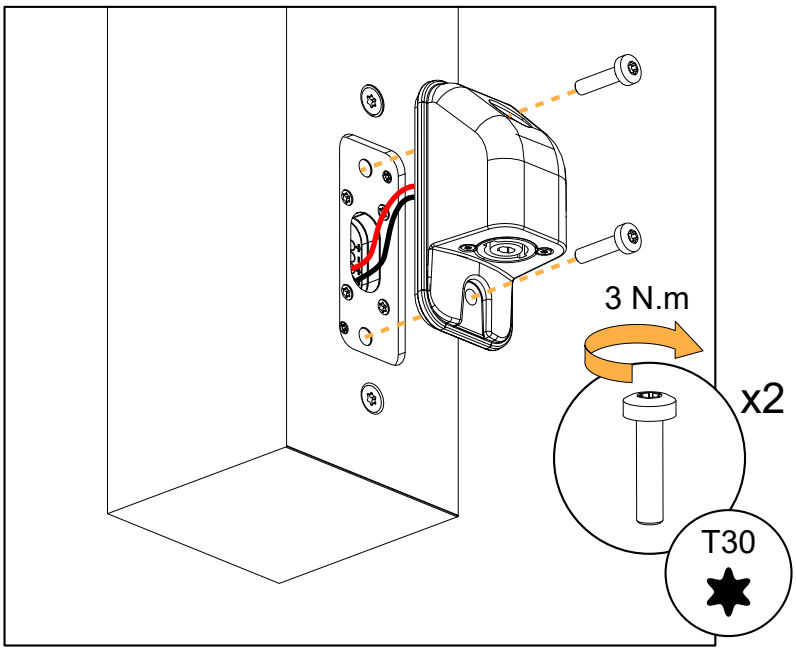

4. Connect the speaker cable to SPCON.

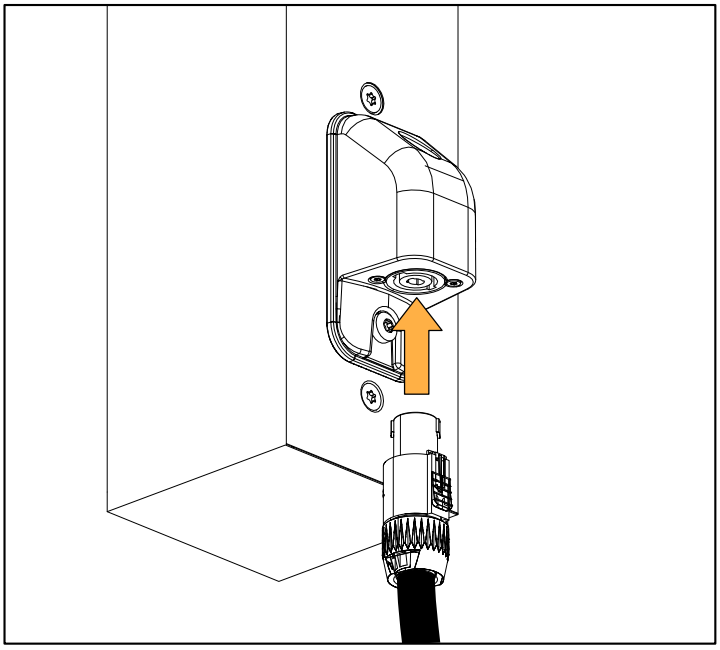

Corrective maintenance

Introduction

This section contains the following maintenance procedures:

Soka

- D/R - Grill (p.88)
- D/R - LF speaker (p.89)
- D/R - Waveguide (p.91)
- D/R - HF driver (p.92)

For advanced maintenance, contact your L-Acoustics representative.

Tools and consumables

Before performing maintenance on this product, make sure all the tools listed are available. References are given for FACOM® products in this table. Other manufacturers can be used.

name	reference	distributor
set of 6-point 1/4" sockets*	RL.NANO1 / R.360NANO	FACOM
torque screwdriver (2 - 10 N.m)*	A.404	FACOM
flat plastic tool	—	—
blue threadlocker	—	—

* included in the L-Acoustics Maintenance Toolcase.

Maintenance Toolcase

The Maintenance Toolcase is a carry-on suitcase that includes all the tools required to perform maintenance on L-Acoustics products. This toolcase is aimed at Certified Providers.

The Maintenance Toolcase uses a Peli™ 1510 Protector case that features three pre-cut layers of foam to safely fit the tools. The Maintenance Toolcase includes tools manufactured by FACOM®, Fluke®, Tohnichi, ABUS, and Würth.

All third-party trademarks, registered trademarks, or product names are the property of their respective owners.

Exploded views

In order to operate, follow the order outlined here. Each assembly refers to the corresponding Disassembly/Reassembly (D/R) procedure and the necessary repair kit.

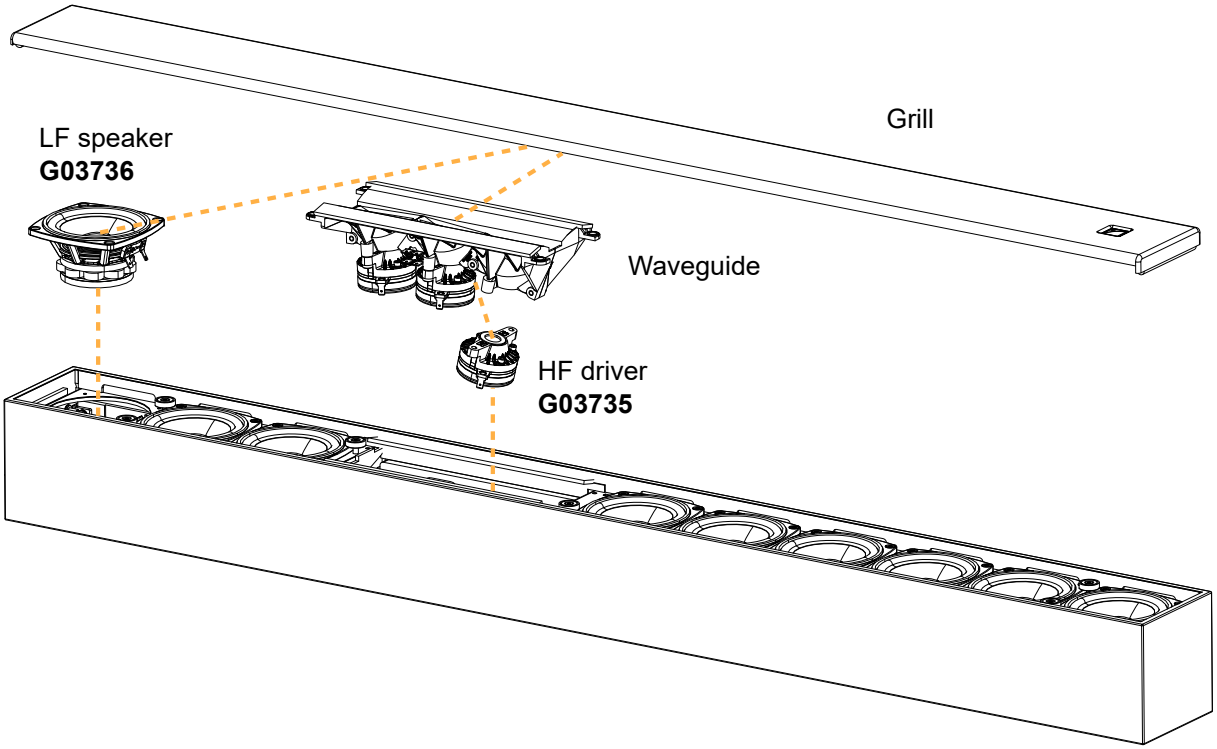

Disassembly and Reassembly procedures

D/R - Grill

Tools and consumables

- flat plastic tool
- torque screwdriver
- T10 Torx bit
- blue threadlocker

Repair kit

G03736

KR loudspeaker 3.5" SOKA(r)

×2

S240

M3×8 Torx

Exploded view

For safety reasons, always use the new screws and spare parts provided in the KR.
If no new screws are available, use blue threadlocker.

Use a flat plastic tool as a lever.

Disconnect the tether to fully separate the grill from the cabinet, if necessary.

Put blue threadlocker on the magnet screw before reassembly.

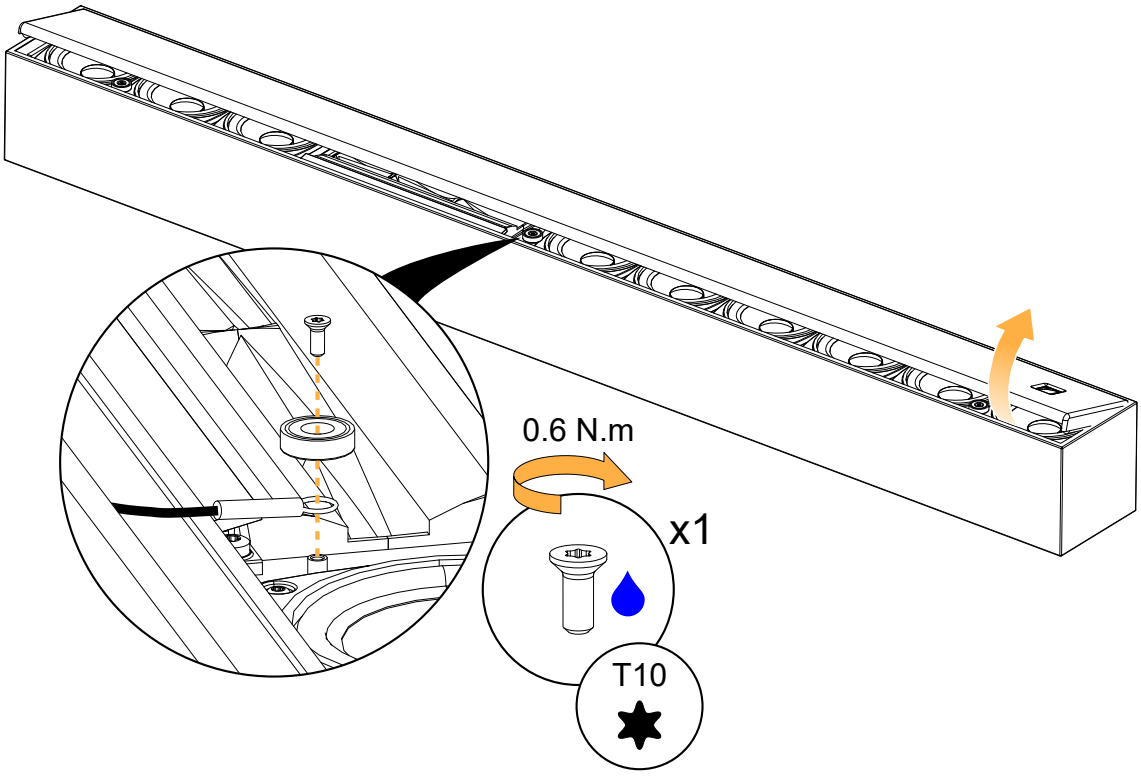

D/R - LF speaker

Tools and consumables

- torque screwdriver
- T10 Torx bit
- blue threadlocker

Repair kit

G03736

KR loudspeaker 3.5" SOKA(r)

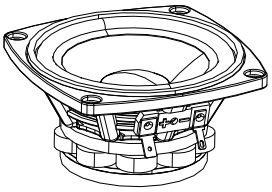

×1

18392

3.5" LF speaker - 8 Ω

×4

S100063

M3×8 Torx

×2

S240

M3×8 Torx

Prerequisite

Grill removed.

See D/R - Grill (p.88).

Exploded view

For safety reasons, always use the new screws and spare parts provided in the KR.
If no new screws are available, use blue threadlocker.

Gradually tighten the screws following a star pattern.

Remove the magnets if necessary, and save them for reassembly.

Put blue threadlocker on the magnet screws before reassembly.

Position the connectors toward the bottom of the enclosure.

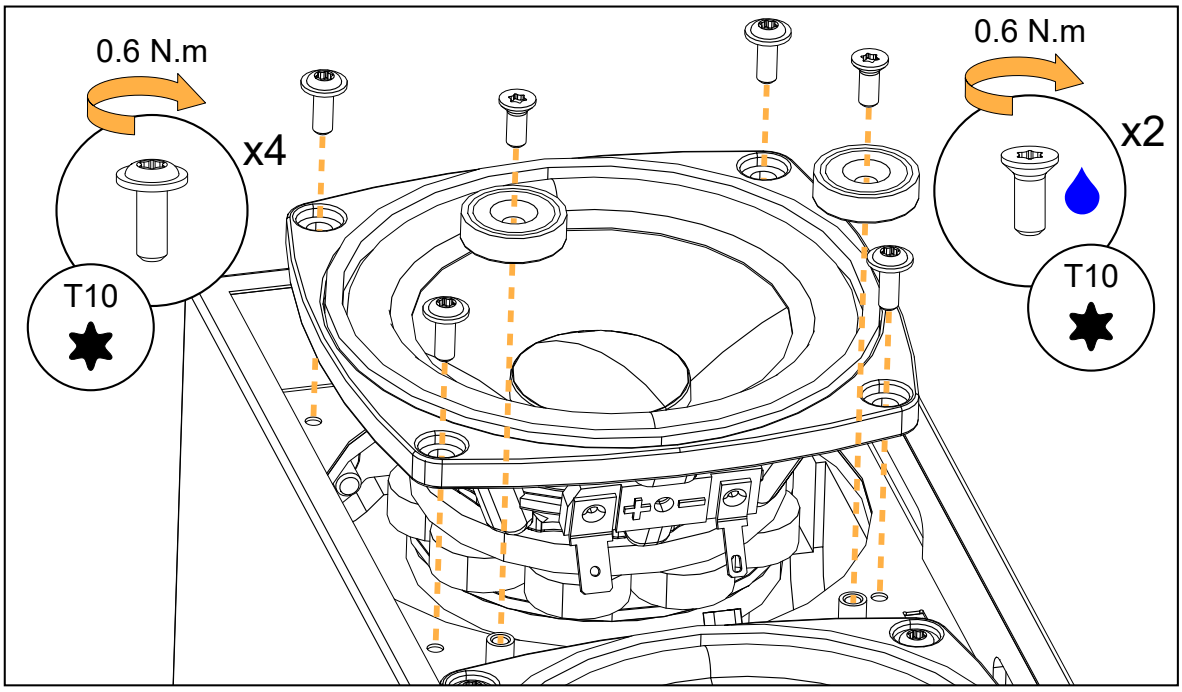

Magnets

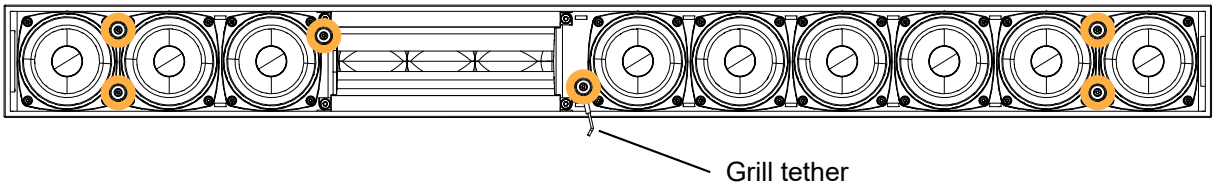

Cabling

Top speakers

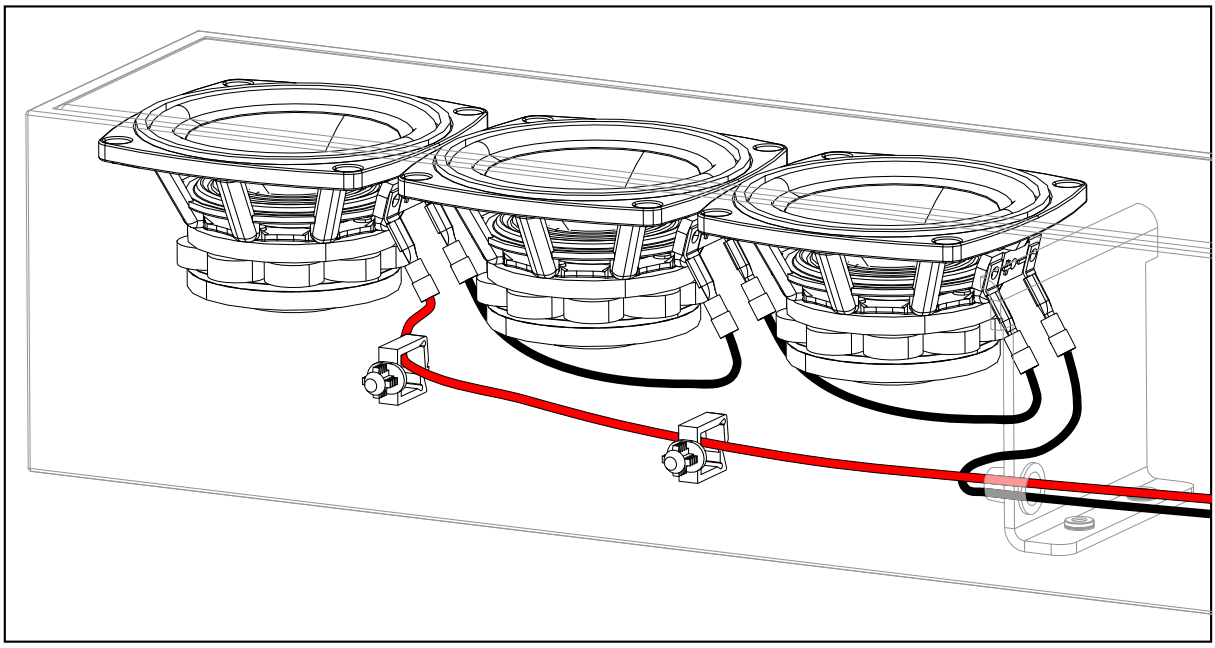

Bottom speakers

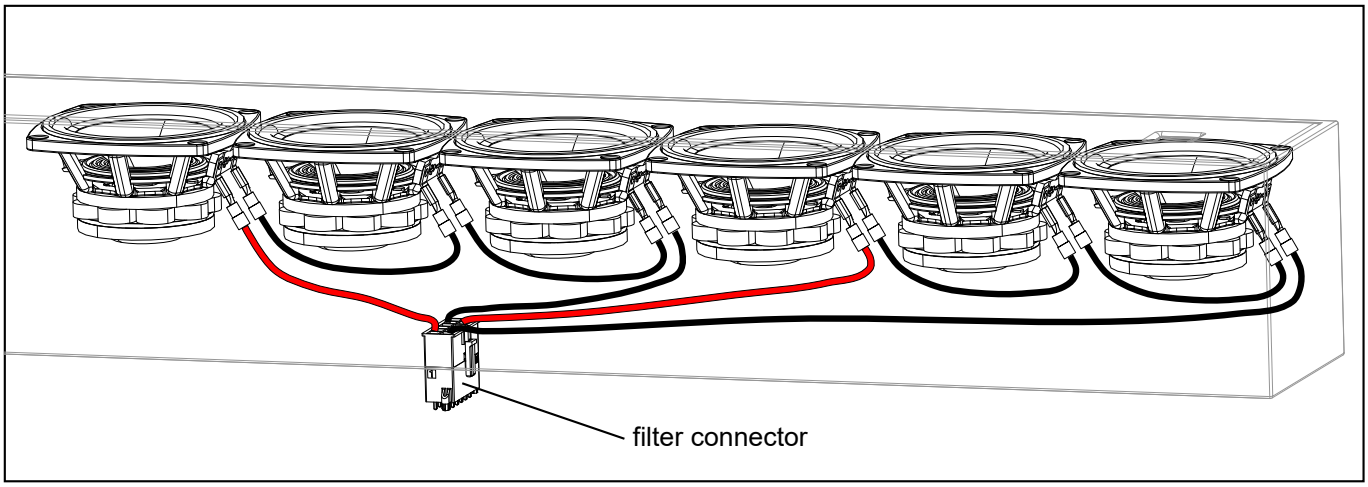

What to do next

Perform the Acoustical check (p.37) procedures.

D/R - Waveguide

Tools

- torque screwdriver
- T20 Torx bit
- flat plastic tool

Repair kit

G03735

KR compression driver 1" SOKA(r)

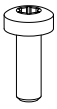

×4

S100039

M4×12 Torx

Prerequisite

Grill removed. See D/R - Grill (p.88).

Exploded view

For safety reasons, always use the new screws and spare parts provided in the KR.
If no new screws are available, use blue threadlocker.

Gradually tighten the screws following a star pattern.

Use a flat plastic tool as a lever.

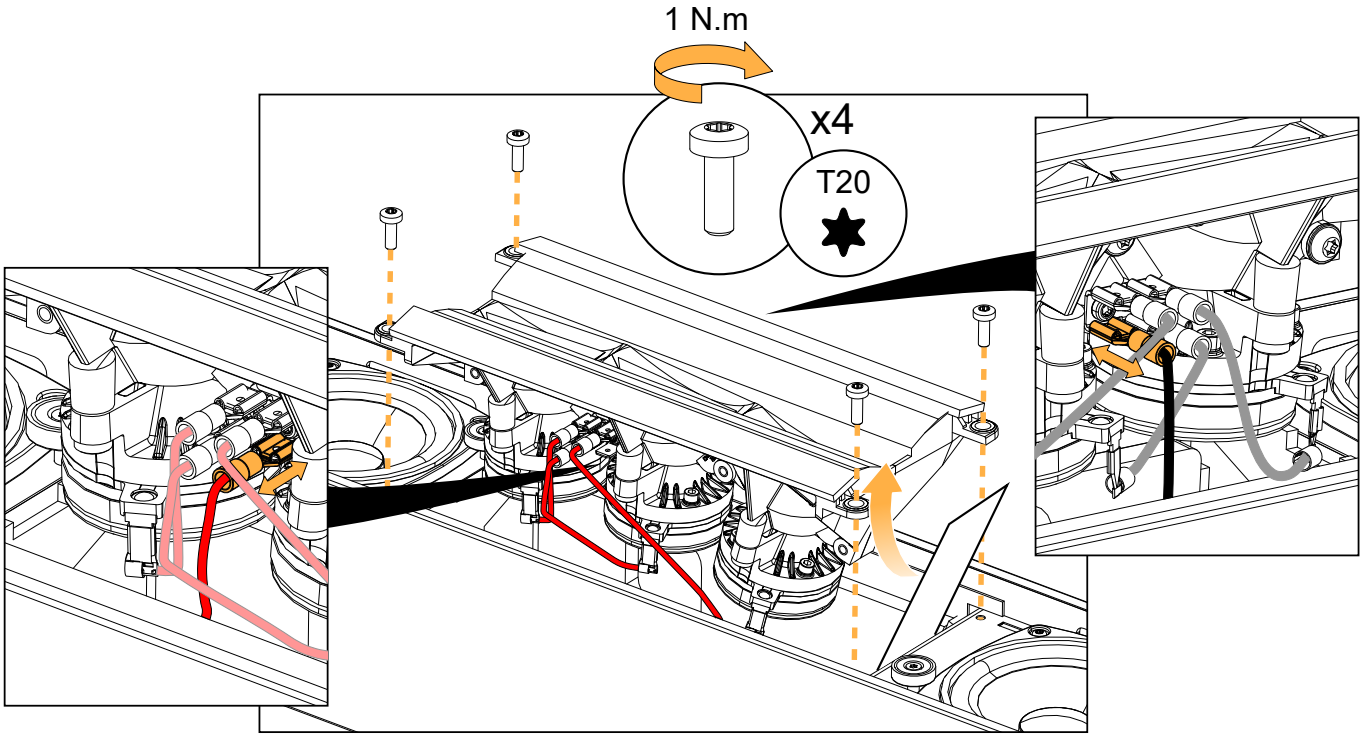

D/R - HF driver

Tools

- torque screwdriver
- T20 Torx bit

Repair kit

G03735

KR compression driver 1" SOKA(r)

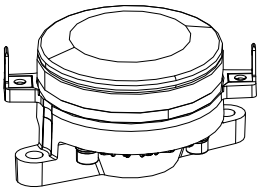

×1

18393

1" HF driver assembly - 8 Ω

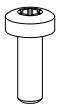

×4

S100039

M4×12 Torx

Prerequisite

Grill removed.	See D/R - Grill (p.88).
Waveguide removed.	See D/R - Waveguide (p.91).

Exploded view

For safety reasons, always use the new screws and spare parts provided in the KR.
If no new screws are available, use blue threadlocker.

Carefully disconnect the cables.

Use the positive (red) connector as a reference point to position the drivers.

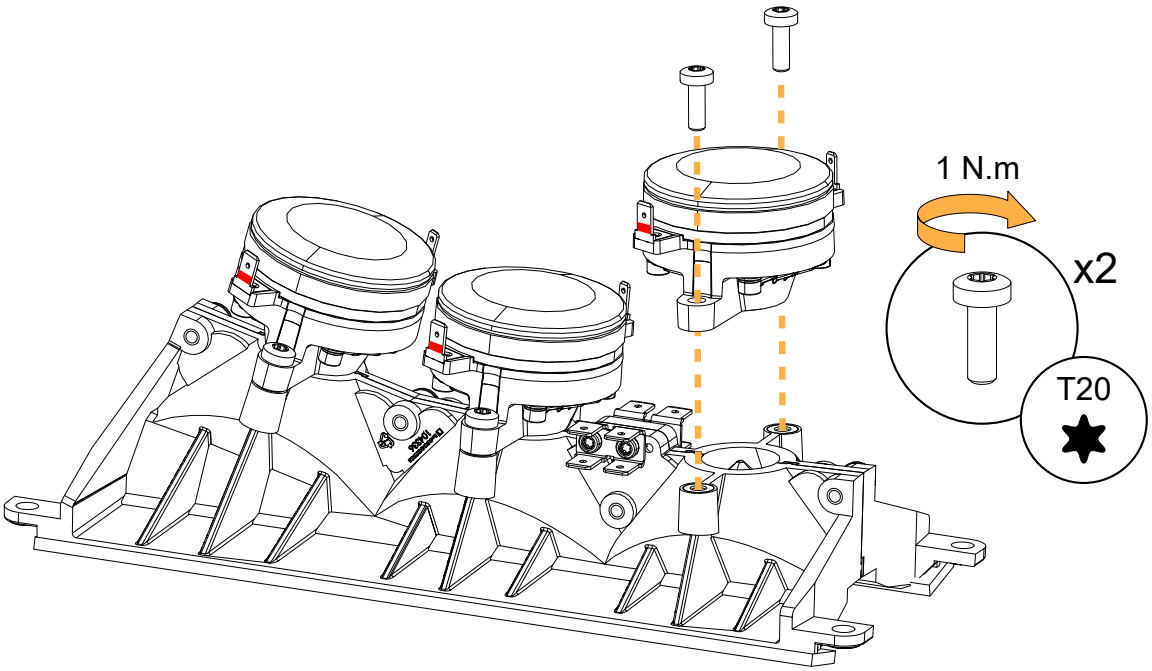

Cabling

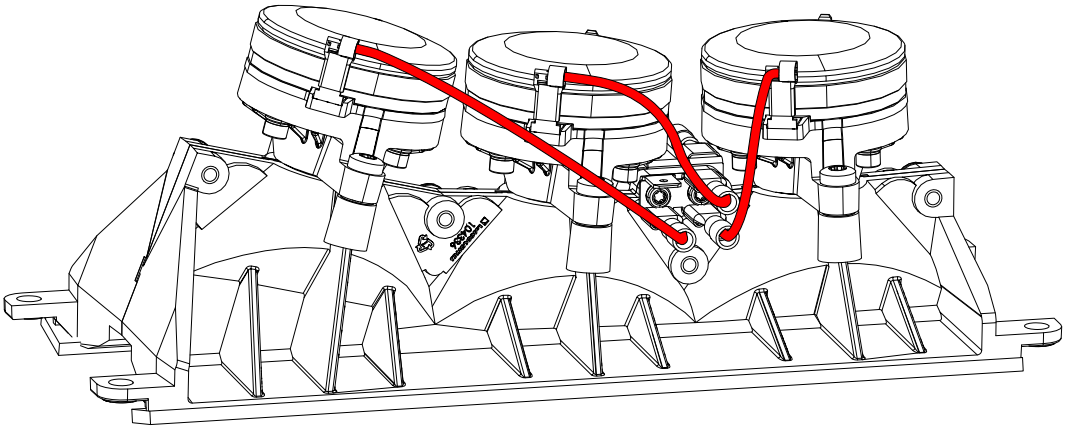

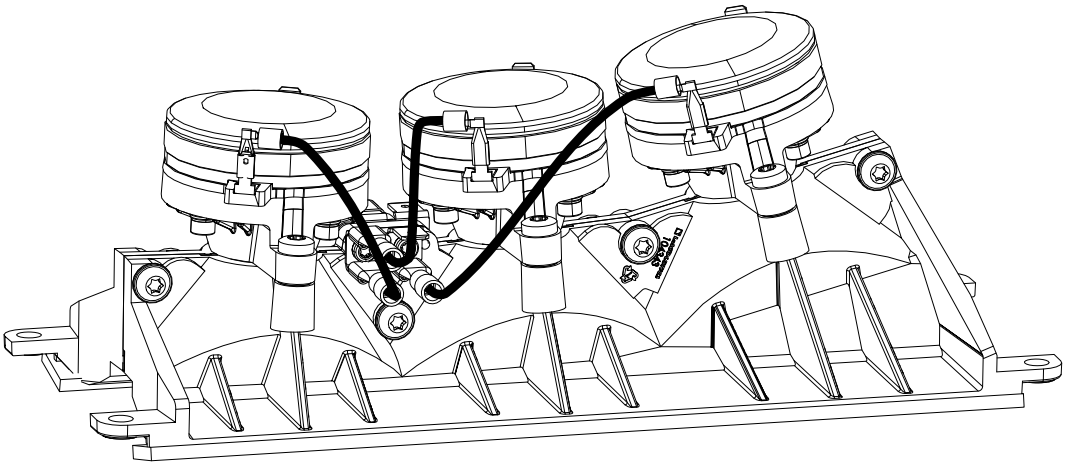

Specifications

Soka specifications

Description		2-way passive colinear enclosure: 9 × 3.5" LF + 3 × 1" HF diaphragm, amplified by LA2Xi / LA4X / LA7.16i / LA12X		
		with preset [SOKA_60]	with preset [SOKA]	with preset [SOKA_200]
Usable bandwidth (-10 dB)		60 Hz - 20 kHz	100 Hz - 20 kHz	200 Hz - 20 kHz
Maximum SPL[1]	with LA2Xi (bridge mode) / LA4X / LA7.16i / LA12X	124 dB	130 dB	133 dB
	with LA2Xi	124 dB	128 dB	130 dB
Nominal directivity (-6 dB)		vertical: +5/-21° (> 2 kHz)		
		horizontal: 140°		
Transducers		LF: 9 × 3.5" neodymium cone driver		
		HF: 3 × 1" neodymium		
Acoustical load		LF: closed enclosure		
		HF: conical waveguide, L-Fins		
Nominal impedance		8 Ω		
Connectors		1 × 4-point terminal block with push-in connection		
Rigging and handling		6 M6 inserts for external rigging and safety		
Weight (net)		9.4 kg / 20.7 lb		
Cabinet		premium grade Baltic beech and birch plywood		
Front		coated steel grill		
		acoustically neutral 3D fabric		
Finish		dark grey brown Pantone 426 C		
		pure white RAL 9010		
		custom RAL code on special order		
IP		IP55		

[1] Peak level measured at 1 m under free field conditions using pink noise with crest factor 4 (preset specified in brackets).

Soka dimensions

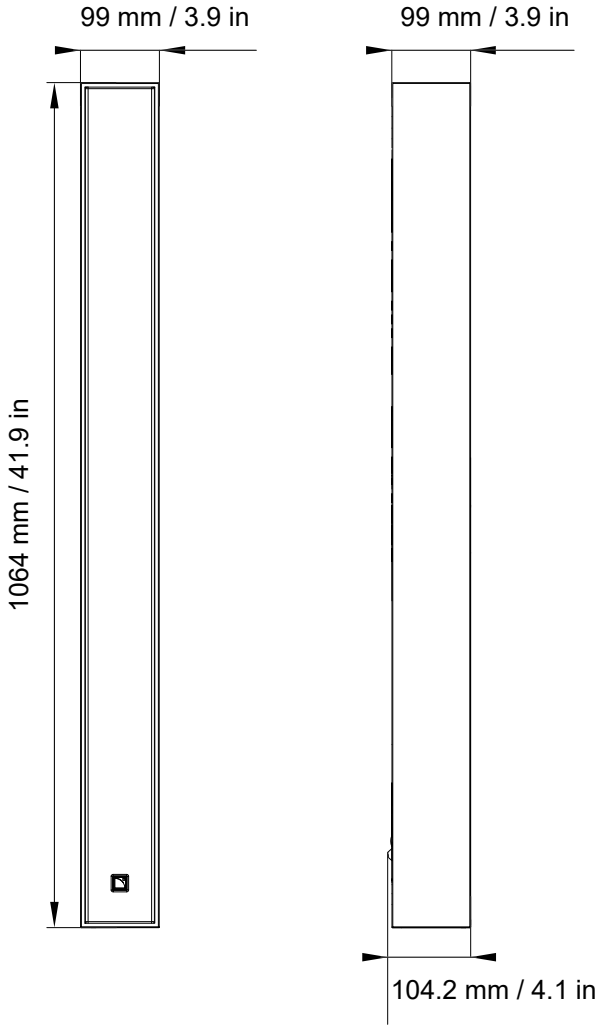

SB6i specifications

Description	Ultra-shallow subwoofer: 2 × 6.5", amplified by LA2Xi / LA4X / LA7.16i / LA12X		
	with preset [SB6_60]	with preset [SB6_100]	with preset [SB6_200]
Low frequency limit (-10 dB)	29 Hz	29 Hz	32 Hz
Maximum SPL[1]	110 dB	111 dB	115 dB
Nominal directivity (-6 dB)	standard configuration		
Transducers	2 × 6.5" cone driver		
Acoustical load	bass-reflex, L-Vents		
Nominal impedance	4 Ω		
Connectors	1 × 4-point terminal block with push-in connection		
Rigging and handling	8 M6 inserts for rigging accessories		
Weight (net)	8.6 kg / 19 lb		
Cabinet	premium grade Baltic beech and birch plywood		
Front	coated steel grill		
	acoustically neutral 3D fabric		
Finish	dark grey brown Pantone 426 C		
	pure white RAL 9010		
	custom RAL code on special order		
IP	IP55		

[1] Peak level at 1 m under half space conditions using pink noise with crest factor 4 (preset specified in brackets).

SB6i dimensions

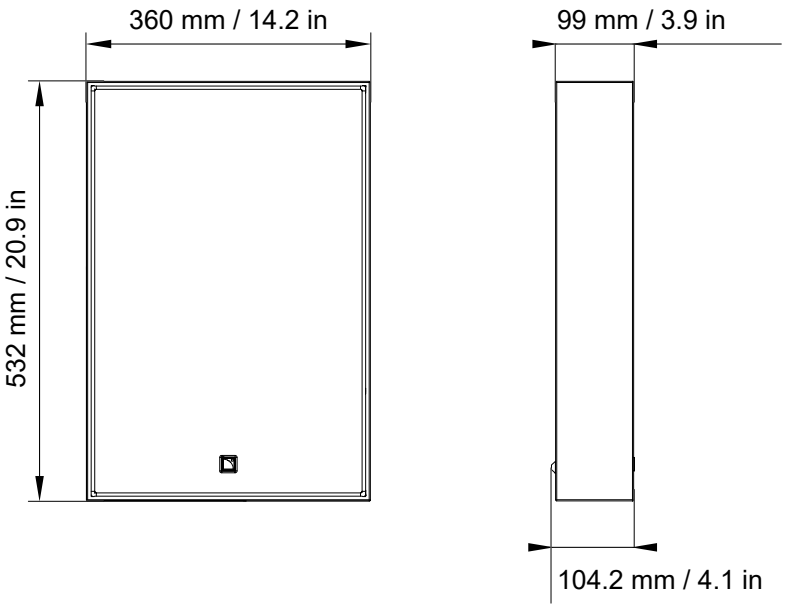

SB10i specifications

Description		Ultra-compact subwoofer: 1 × 10" (installation version), amplified by LA2Xi / LA4X / LA7.16i / LA12X		
		with [SB10_60]	with [SB10_100]	with [SB10_200]
Low frequency limit (-10 dB)		25 Hz	27 Hz	29 Hz
Maximum SPL[1]	with LA2Xi (bridge mode) / LA4X / LA7.16i / LA12X	119 dB	122 dB	125 dB
	with LA2Xi	119 dB	120 dB	123 dB
Nominal directivity (-6 dB)		standard configuration		
Transducers		1 × 10" cone driver		
Acoustical load		bass-reflex, L-Vents		
Nominal impedance		8 Ω		
Connectors		1 × 4-point terminal block with push-in connection		
Rigging and handling		12 M6 inserts for rigging accessories		
Weight (net)		14 kg / 31 lb		
Cabinet		premium grade Baltic birch plywood		
Front		coated steel grill		
		acoustically neutral 3D fabric		
Finish		dark grey brown Pantone 426 C		
		pure white RAL 9010		
		custom RAL code on special order		
IP		IP55		

[1] Peak level at 1 m under half space conditions using pink noise with crest factor 4 (preset specified in brackets).

SB10i dimensions

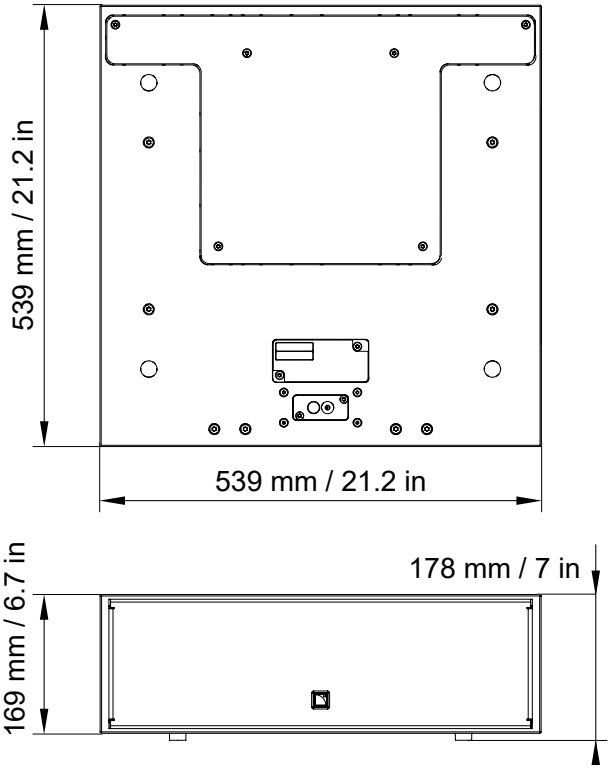

Soka-onW specifications

Description	On-wall mounting accessory for Soka
Weight (net)	0.36 kg / 0.79 lb
Material	steel with anti-corrosion coating

Soka-onW dimensions

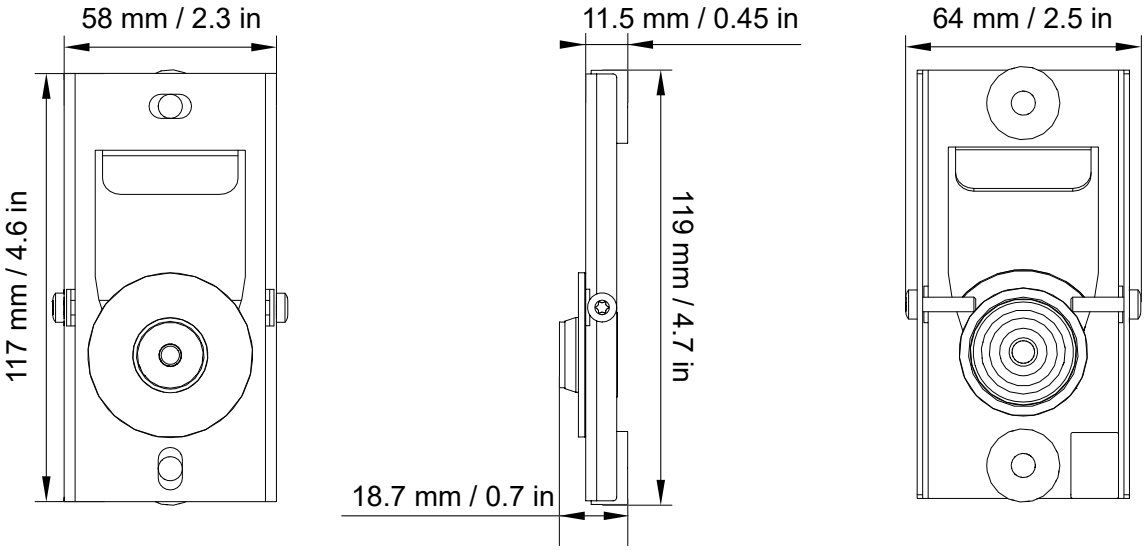

WALLx2 specifications

Description	Wall-mounting kit
Weight (net)	0.4 kg / 0.9 lb
Material	steel with anti-corrosion coating

WALLx2 dimensions

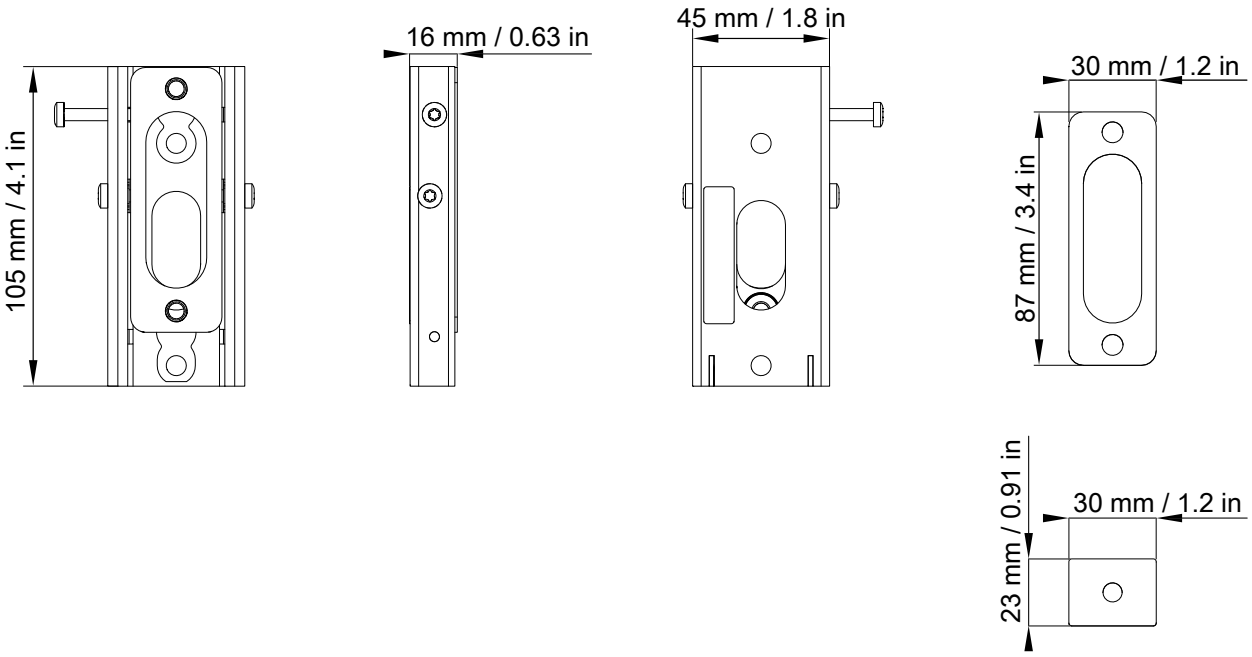

PANx2 specifications

Description	Adjustable pan accessory kit +/-45°
Weight (net)	0.8 kg / 1.8 lb
Material	steel with anti-corrosion coating

PANx2 dimensions

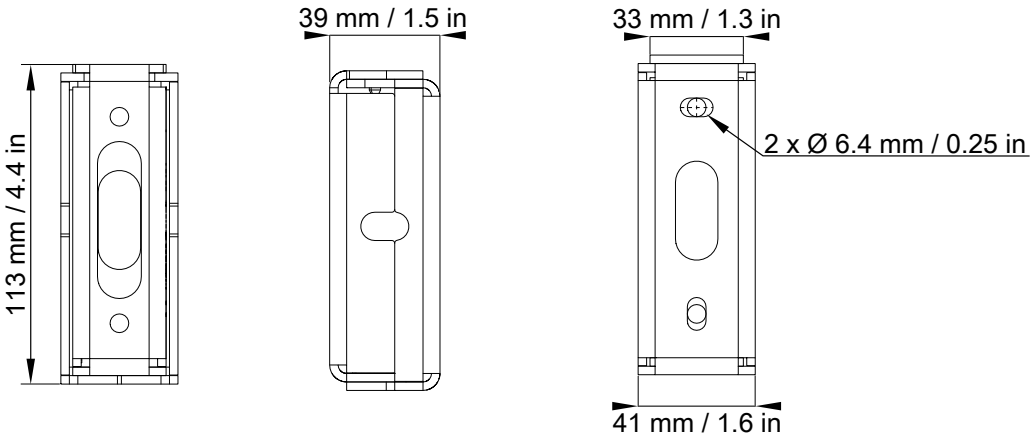

TILT5 specifications

Description	Fixed tilt accessory 5°
Weight (net)	0.3 kg / 0.7 lb
Material	steel with anti-corrosion coating

TILT5 dimensions

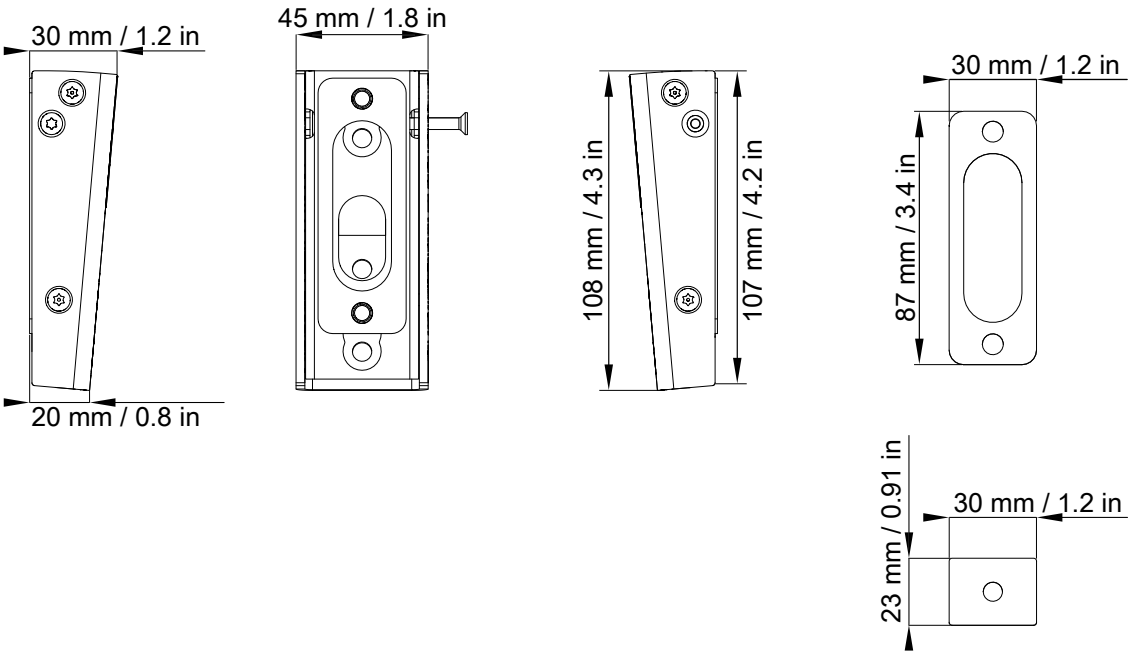

PAN specifications

Description	Adjustable pan accessory +/-45°
Weight (net)	0.4 kg / 0.9 lb
Material	steel with anti-corrosion coating

PAN dimensions

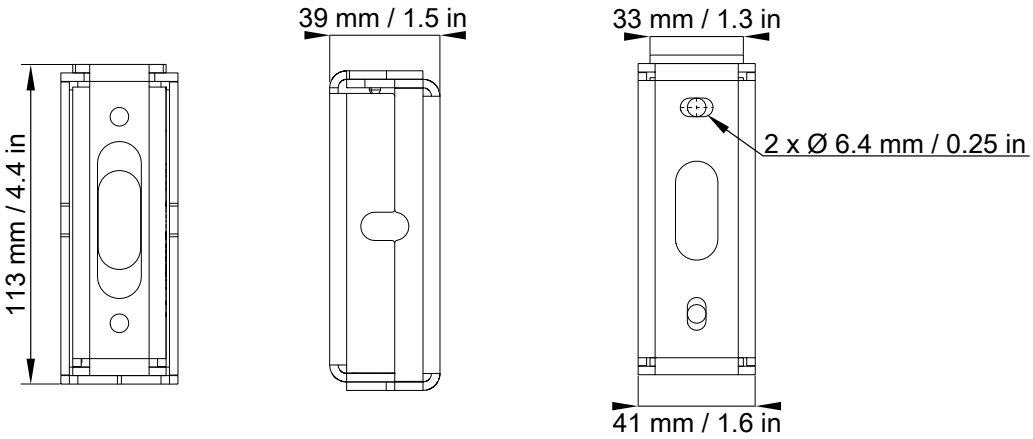

TILT-SUPPORT specifications

Description	Support plate for TILT/PAN/WALL accessories
Weight (net)	0.5 kg / 1.1 lb
Material	steel with anti-corrosion coating

TILT-SUPPORT dimensions

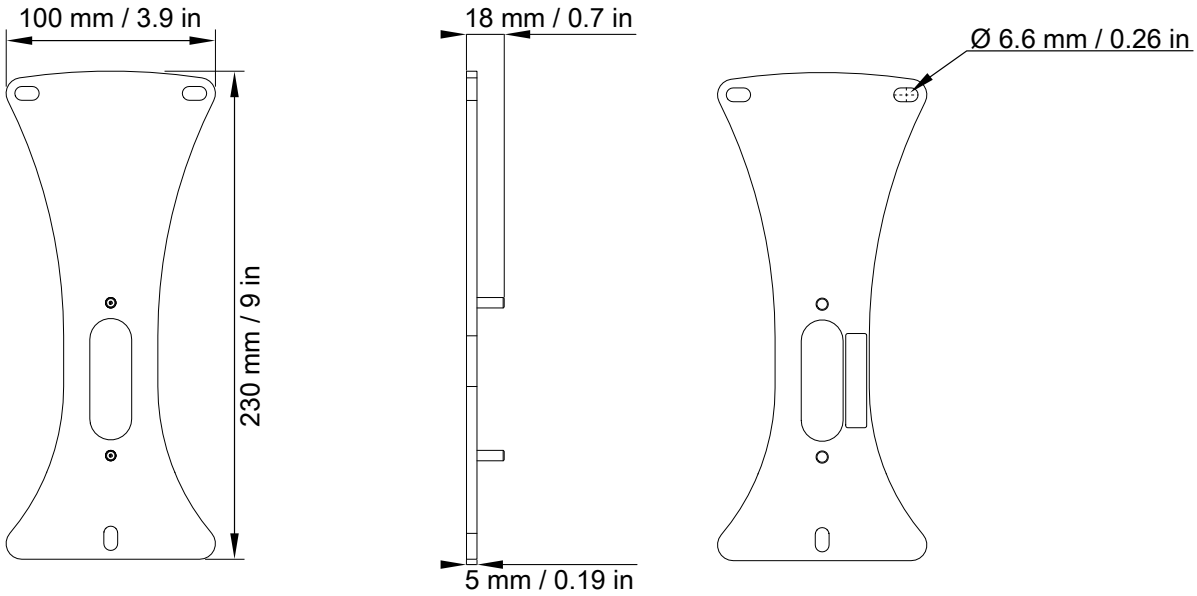

VBAR specifications

Description	Rigging accessory for vertically-oriented loudspeaker
Weight (net)	0.5 kg / 1.1 lb
Material	steel with anti-corrosion coating

VBAR dimensions

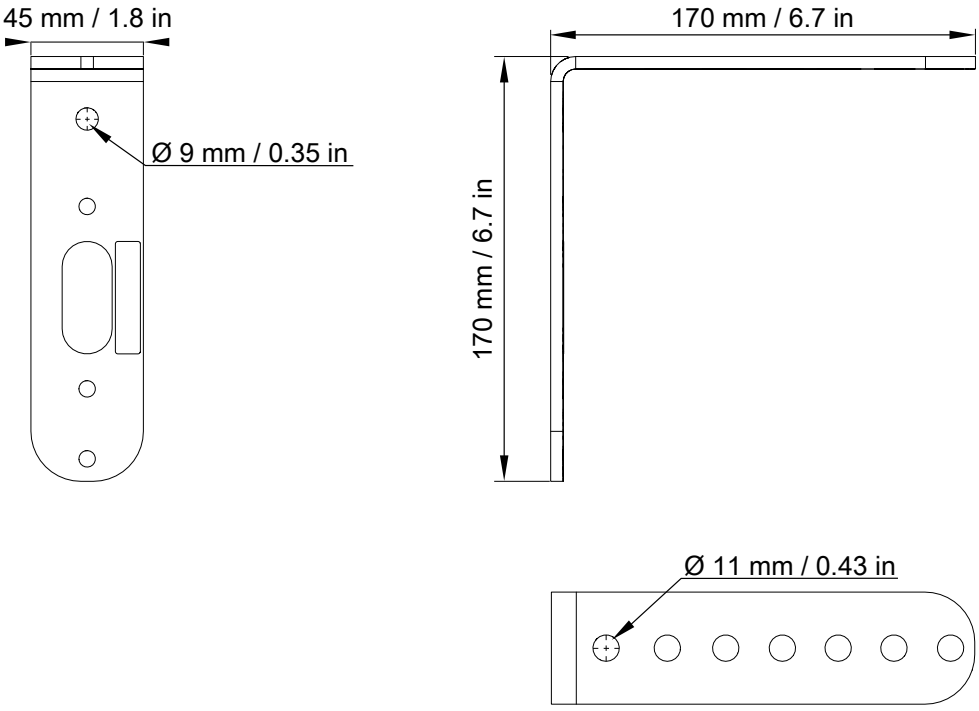

POLE specifications

Description	Pole-mount adapter
Weight (net)	0.5 kg / 1.1 lb
Material	steel with anti-corrosion coating

POLE dimensions

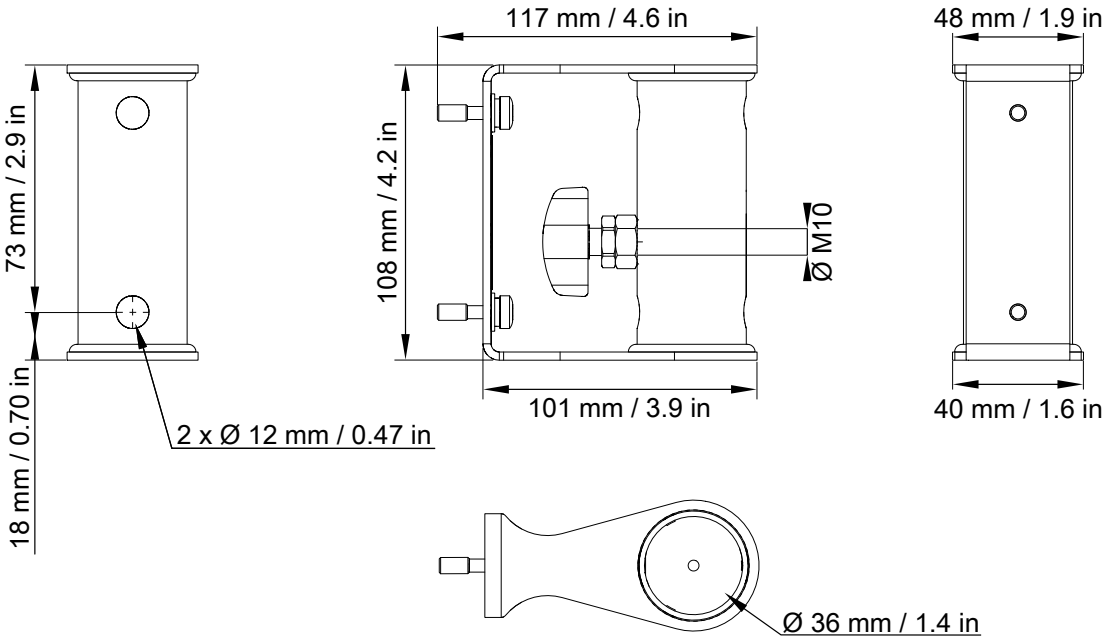

SPCON specifications

Description	2-point speakON adaptor (2.5 mm² gauge) for terminal blocks
Weight (net)	0.1 kg / 0.2 lb
Material	moulded ABS polymer

SPCON dimensions

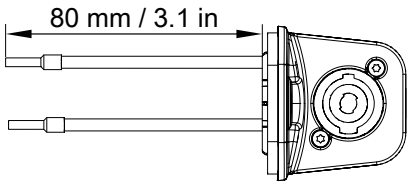

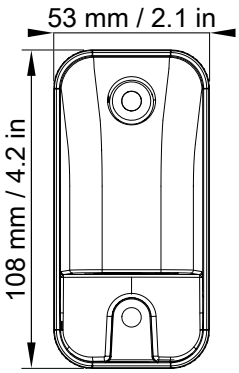

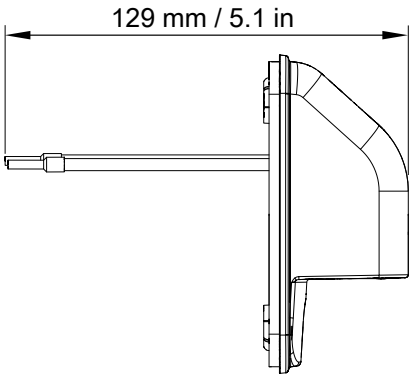

Specifications for screws and anchors

Use the following information to choose compatible screws and anchors for mounting Soka on the wall or on the ceiling.

Risk of crushing injury

Ensure that the wall or ceiling can support the load of the product.

It is recommended to mount only on solid structures. If mounting on a hollow structure (such as a wall cavity), place anchoring points on the framework (wall studs, ceiling joists), or reinforce the mounting area.

Select screws and anchors applicable to the wall or ceiling properties and to the load of the product. Prevent screws from loosening over time, using for example thread locker or lock washers.

deployment	accessory	ultimate tensile load per screw (daN)	ultimate shear load per screw (daN)	screws quantity	mounting hole size	specific constraints
wall-mounting	TILT-SUPPORT + any accessory	5	8	3	Ø 6.4 mm / 0.25 in (slotted)	–
wall-mounting	Soka-onW	4	4	4	Ø 6.4 mm / 0.25 in (slotted)	total thickness with spacers: 11.50 mm / 0.45 in
wall-mounting	WALLx2	4	4	4	Ø 5.2 mm / 0.20 in	maximum screw head size: Ø 11 mm / 0.43 in
wall-mounting	PANx2	4	4	4	Ø 6.4 mm / 0.25 in (slotted)	–
ceiling-mounting	VBAR	12	–	2	Ø 10.4 mm / 0.41 in	use the holes 1 and 7 (at both ends)

Recommendation for speaker cables

Cable quality and resistance

Only use high-quality fully insulated loudspeaker cables made of stranded copper wire.

Use cables with a gauge offering low resistance per unit length and keep the cables as short as possible.

It is good practice to keep loudspeaker cables short to ensure optimal system performance. L-Acoustics strongly recommends using cables of similar type, length, and gauge to address symmetrical deployment of loudspeakers, such as stereo systems, L-ISA frontal systems, or outfill systems.

For more information about cable effect on loudspeaker frequency response, refer to the publication **Demystifying the effects of loudspeaker cables** on the L-Acoustics website, in **Education** > **Scientific resources** > **Scientific publications**.

Refer to the following table for recommended cable length for uncompromised performance.

cable gauge			**recommended maximum length**					
			8 Ω load		**4 Ω load**		**2.7 Ω load**	
mm ^{2}	SWG	AWG	m	ft	m	ft	m	ft
1.5	18	16	18	60	9	30	–	–
2.5	15	14	30	100	15	50	10	33
4	13	11	50	160	25	80	17	53
6	11	9	74	240	37	120	25	80

Use the more detailed L-Acoustics calculation tool to evaluate cable length and gauge based on the type and number of loudspeakers connected. The calculation tool is available on our website:

https://www.l-acoustics.com/installation-tools/

Specifications for custom rigging

Dimensions

Refer to Soka dimensions (p.95).

Center of gravity

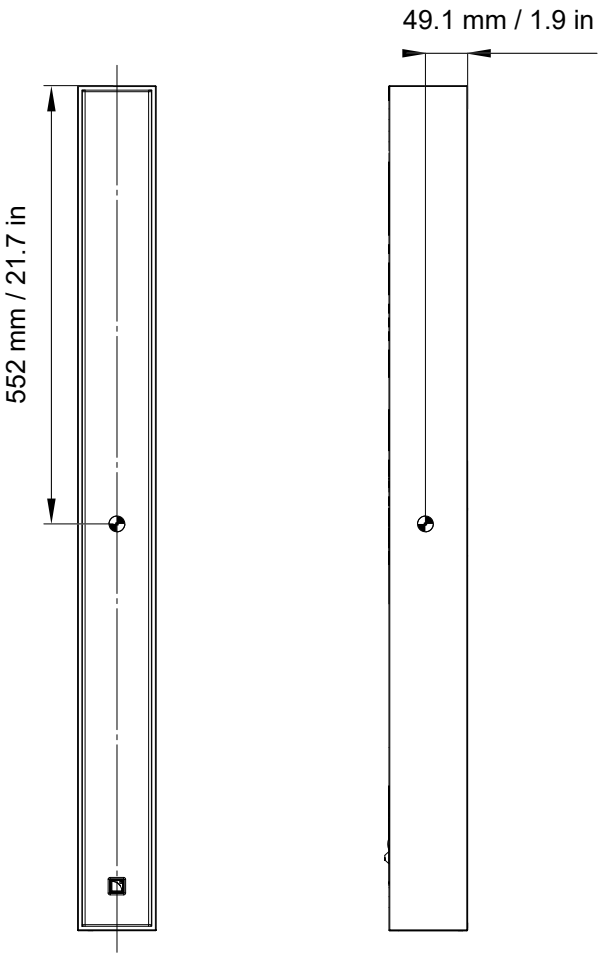

Weight

Soka: 9.4 kg / 20.7 lb

Threaded inserts and screws

Use only rigging inserts to implement a custom rigging

Inserts marked with ○ can be used for rigging.

Inserts marked with ✕ must not be used for custom rigging (reserved for screen mounting, maintenance purposes, L-Acoustics accessories, etc.).

Grade of screws must be defined by a qualified person

Take into consideration the number of inserts used, weight and center of gravity of enclosure(s), and resulting action forces.

Prevent screws from loosening (threadlocker, spring washer...).

Soka has **9 threaded M6 inserts** available for rigging.

Ultimate Tensile Strength	1160 N
Ultimate Shear Strength	3300 N
Recommended screw length*	min. 20 mm / 0.8 in
Recommended torque	5 N.m

* Recommended screw length for a metal sheet with a thickness of 3 mm / 0.1 in. Adapt the length to the custom rigging design.

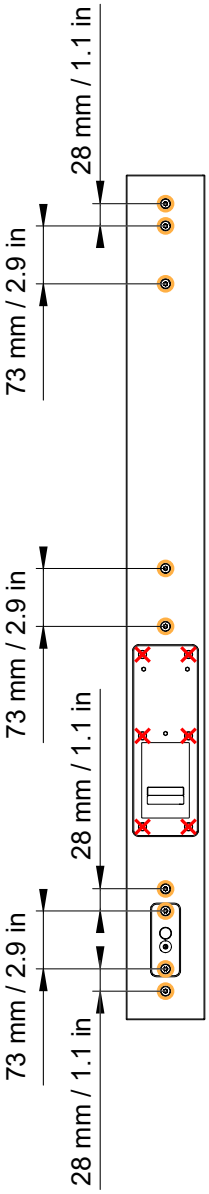

L-Acoustics
13 rue Levacher Cintrat - 91460 Marcoussis - France
+33 1 69 63 69 63 - info@l-acoustics.com
www.l-acoustics.com

L-ACOUSTICS
GROUP